

BROKIS®

NIGHT BIRDS MINI

CM19448

PC1385, PC1386, PC1387

INSTALLATION MANUAL

NIGHT BIRDS MINI

Pendent light

Download

COMPONENTS INCLUDED WITH UNIT:

1× light
1× ceiling canopy
2× set screw M5×16
1× hex key size 2.5
1× pair cotton gloves
1× installation manual

WARNING:

Installation must be carried out by a qualified electrician only!

Switch off power at main circuit panel prior to installation!

The manufacturer assumes no liability for damage occurring in transport or resulting from incorrect installation.

Installation time: 30 minutes / 1 person

CLEANING THE GLASS

BROKIS upholds only the highest possible quality standards. Prior to shipping, the light undergoes several quality controls and stages of cleaning. Because transportation, storage, and the amount of time that passes between packing at our plant and subsequent unpacking by the client can affect the light in different ways, we strongly recommend cleaning it prior to assembly.
The glass must first be rinsed in warm water, and a dish detergent may be used to remove all foreign particles, dust, and grease. Repeat the process if necessary and then dry the glass thoroughly with a paper towel.

Recommendation: Do not use mineral spirits, highly concentrated thinners, or other substances not intended for use on glass surfaces. Do not use any cleaning agents containing silicone, as they may leave a film and attract dust and smudges.

PRIOR TO SHIPPING, THE FUNCTIONALITY OF EACH LIGHT AND ITS COMPONENTS IS CHECKED THOROUGHLY. THE MANUFACTURER ASSUMES NO LIABILITY FOR THE MISHANDLING OF PRODUCTS.

1. INSTALLING THE CEILING CANOPY BRACKET

Using anchors of sufficient strength (not included), attach the bracket to the ceiling. With regard to various types of ceilings, we recommend consulting installation with an expert. The manufacturer assumes no liability for incorrect installation, the use of improper anchors, or defects in the material to which this load-bearing component is secured.

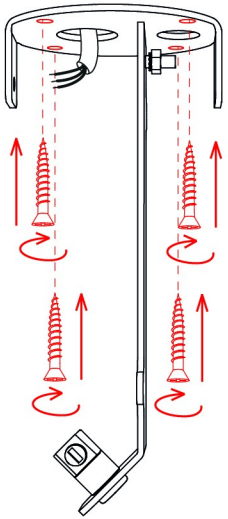

2. INSTALLING THE POWER CABLE

Pass the power cable through the opening in the ceiling canopy.
Pass the power cable through the plastic stop in the ceiling canopy, adjust the length as needed, and then secure it by tightening the screw in the plastic stop.

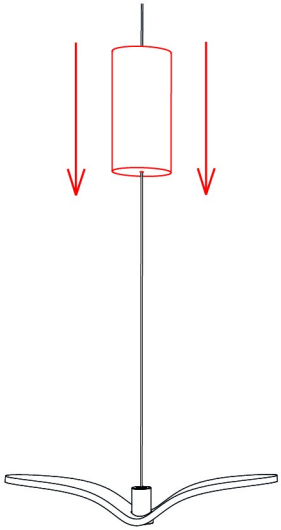

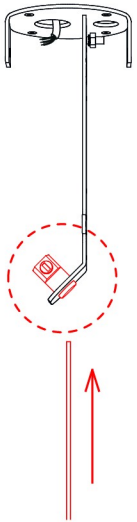

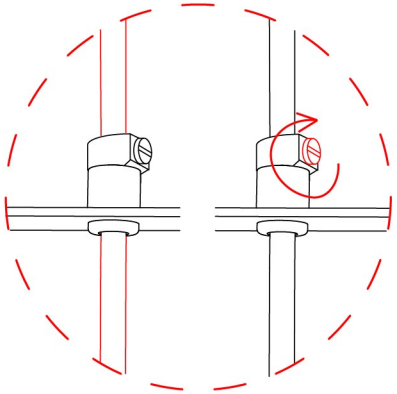

3. CONNECTING THE LIGHT TO THE BUILDING WIRING

Connect the light to the building wiring according to the connection diagram.

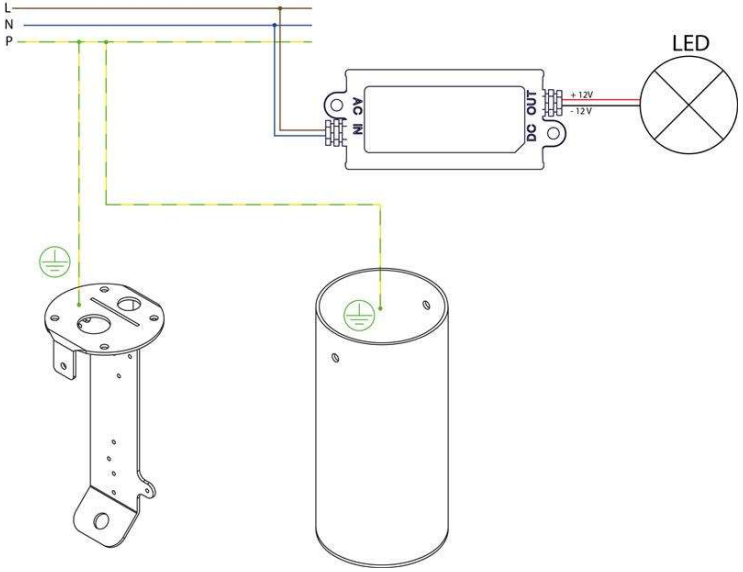

4. INSTALLING THE CEILING CANOPY

Using the two M5×16 set screws and size 2.5 hex key, attach the ceiling canopy to the bracket.

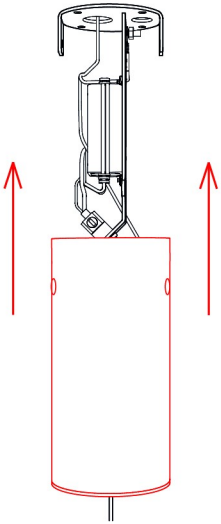

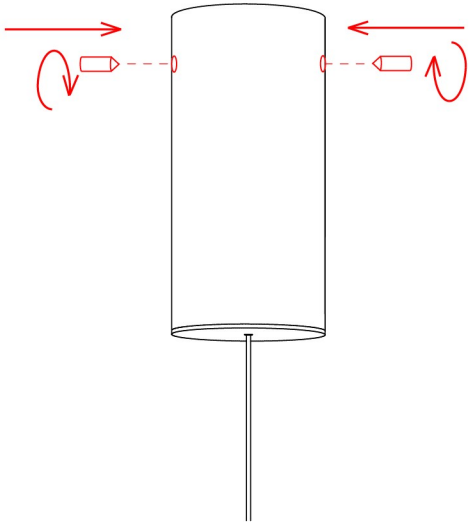

5. LEVELLING THE LIGHT

When levelling the wings on the fixture, ensure that the fixture seal fits properly into opening in the wings and is not deformed. Align the glass and metal fixture so that the sticker with the logo on the fixture is positioned opposite the sticker affixed to the glass (wings). Each fixture is configured to ensure the light hangs level.

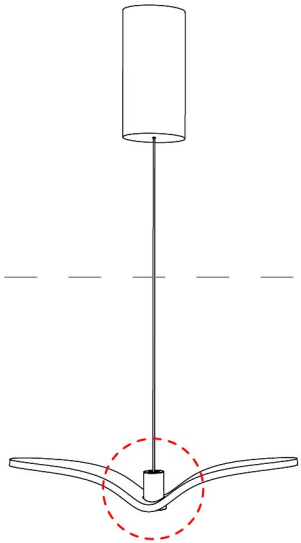

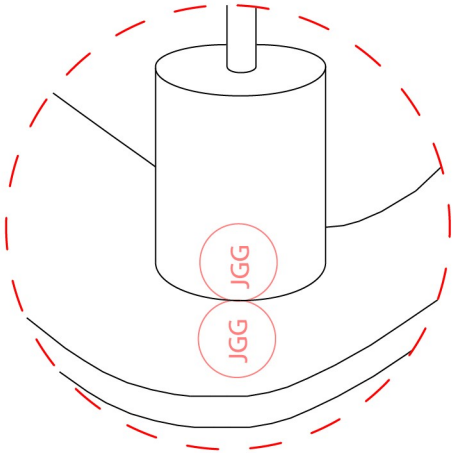

6. **SWITCHING ON THE LIGHT**

Restore power at the main circuit panel and verify that the light works properly.

