

BROKIS®

# NIGHT BIRDS LED

CM20255

PC1431, PC1432, PC1433

# INSTALLATION MANUAL

## NIGHT BIRDS

Pendant light

Download

## COMPONENTS INCLUDED WITH UNIT:

1× glass shade
1× assembled metal body with light source
1× metal ceiling canopy with bracket
2× set screw M5×12
1× hex key size 2.5
1× pair cotton gloves
1× installation manual

## WARNING:

**Installation must be carried out by a qualified electrician only.**

**Switch off power at main circuit panel prior to installation!**

**The manufacturer assumes no liability for damage occurring during transport or resulting from incorrect installation.**

**Installation time: 20 minutes / 2 persons**

BROKIS®

BROKIS S.R.O.
ŠPANIELOVA 1315/25
163 00 PRAHA 6 - ŘEPY
CZECH REPUBLIC

ORG. ID 64940799
VAT ID CZ64940799
C 42174 MĚSTSKÝ SOUD
V PRAZE

TEL +420 567 211 517
TECHNICAL@BROKIS.CZ
INFO@BROKIS.CZ
WWW.BROKIS.COM

## CLEANING THE GLASS

**BROKIS upholds only the highest possible quality standards. Prior to shipping, the light undergoes several quality controls and stages of cleaning. Because transportation, storage, and the amount of time that passes between packing at our plant and subsequent unpacking by the client can affect the light in different ways, we strongly recommend cleaning it prior to assembly.**
**The glass must first be rinsed in warm water, and a dish detergent may be used to remove all foreign particles, dust, and grease. Repeat the process if necessary and then dry the glass thoroughly with a paper towel.**

**Recommendation: Do not use mineral spirits, highly concentrated thinners, or other substances not intended for use on glass surfaces. Do not use any cleaning agents containing silicone, as they may leave a film and attract dust and smudges.**

**PRIOR TO SHIPPING, THE FUNCTIONALITY OF EACH LIGHT AND ITS COMPONENTS IS THOROUGHLY TESTED. THE MANUFACTURER ASSUMES NO LIABILITY FOR THE MISHANDLING OF PRODUCTS.**



BROKIS S.R.O.
ŠPANIELOVA 1315/25
163 00 PRAHA 6 - ŘEPY
CZECH REPUBLIC

ORG. ID 64940799
VAT ID CZ64940799
C 42174 MĚSTSKÝ SOUD
V PRAZE

TEL +420 567 211 517
TECHNICAL@BROKIS.CZ
INFO@BROKIS.CZ
WWW.BROKIS.COM

## 1. INSTALLING THE CEILING CANOPY BRACKET

Using anchors of sufficient strength (not included), attach the bracket to the ceiling. With regard to various types of ceilings, we recommend consulting installation with an expert. The manufacturer assumes no liability for incorrect installation, the use of improper anchors, or defects in the material to which this load-bearing component is secured.

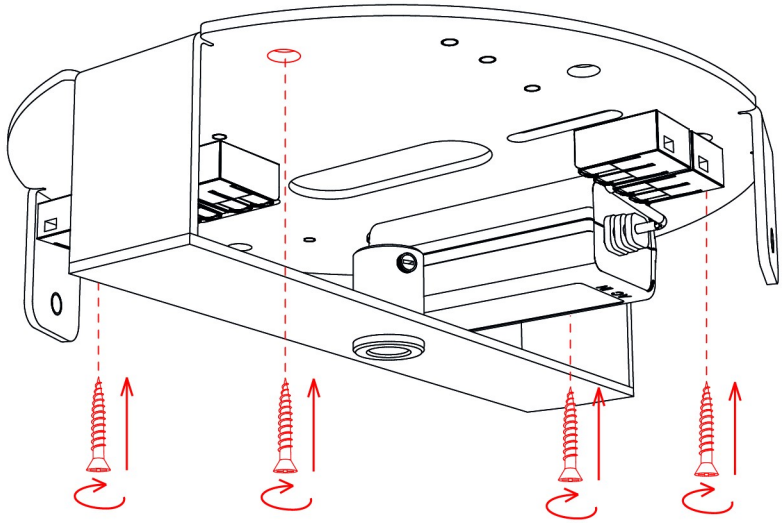

## 2. INSTALLING THE LIGHT

Slide the ceiling canopy onto the power cable. Next, pass the cable through the plastic stop in the canopy bracket. Adjust the length of the cable as needed and secure it in place with the two set screws.

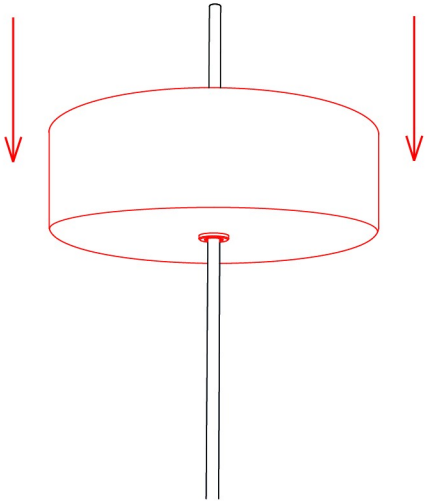

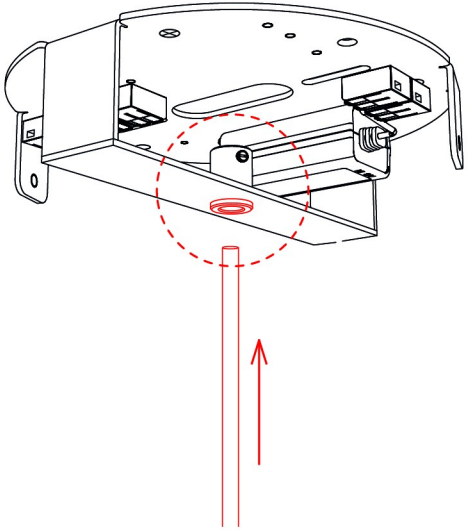

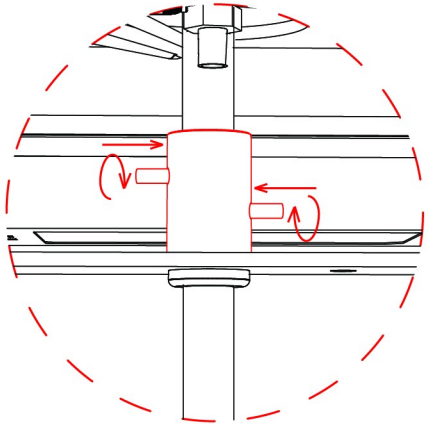

## 3. CONNECTING THE LIGHT TO THE BUILDING WIRING

Connect the light to the building wiring according to the connection diagram.

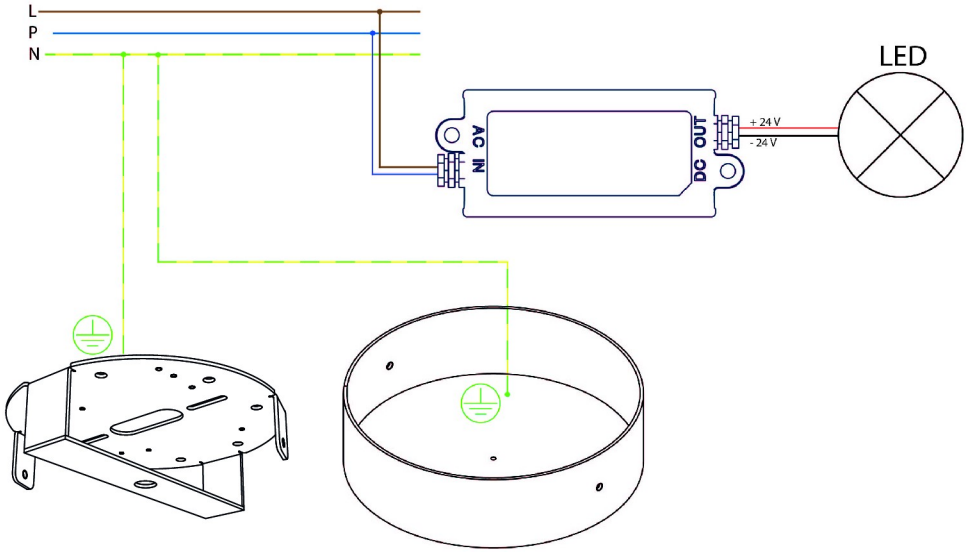

## 4. INSTALLING THE CEILING CANOPY

Using the two M5×16 set screws and size 2.5 hex key, attach the ceiling canopy to the bracket.

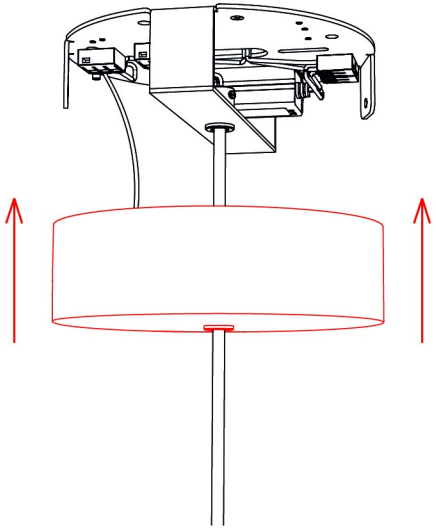

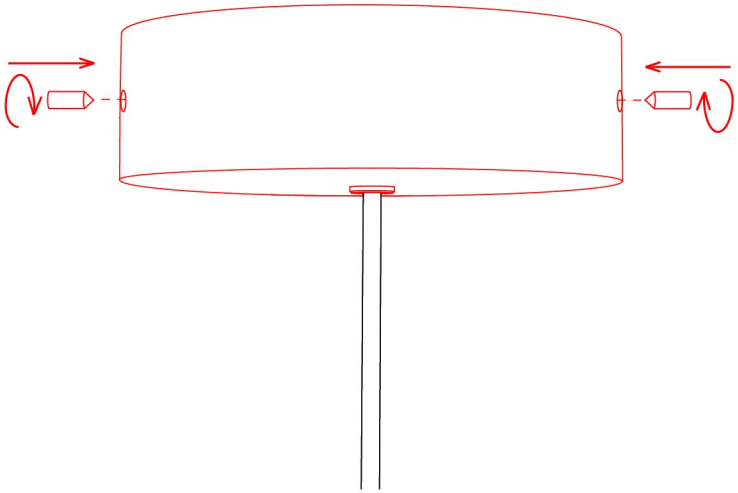

## 5. INSTALLING THE GLASS SHADE

Unscrew the bottom and remove the silicone seal from the metal body. Pass the glass shade and then the silicon seal on the body and screw again the nut. Put the glass shade on the metal body.

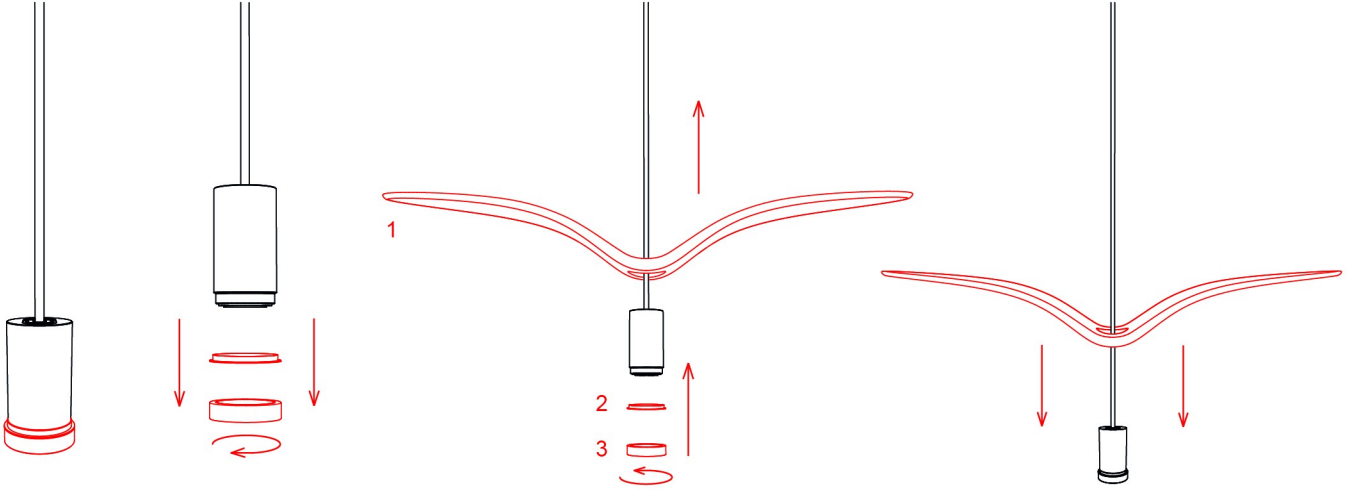

## 6. **BALANCING THE LIGHT**

Align the glass shade and metal part so that the logo sticker on the metal part is opposite the sticker on the glass shade. For each light, the body is set so that the light hangs straight.

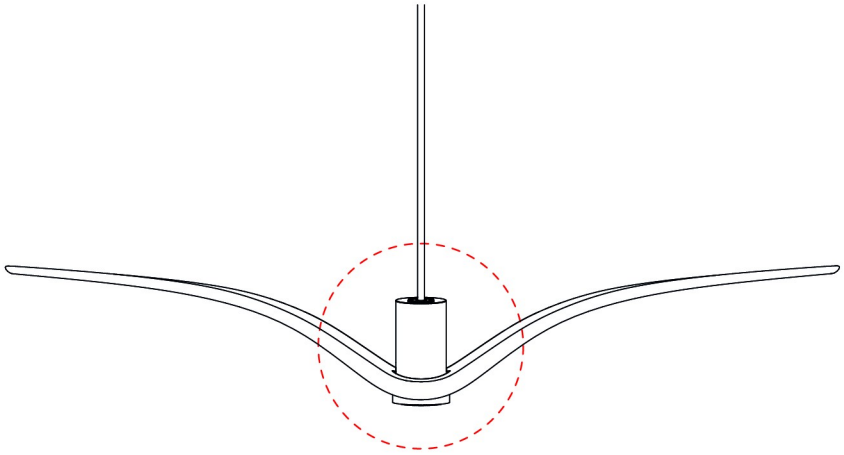

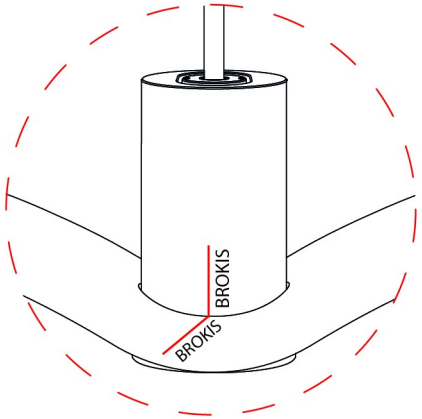

## 7. **SWITCHING ON THE LIGHT**

Restore power at the main circuit panel and verify that the light works properly.

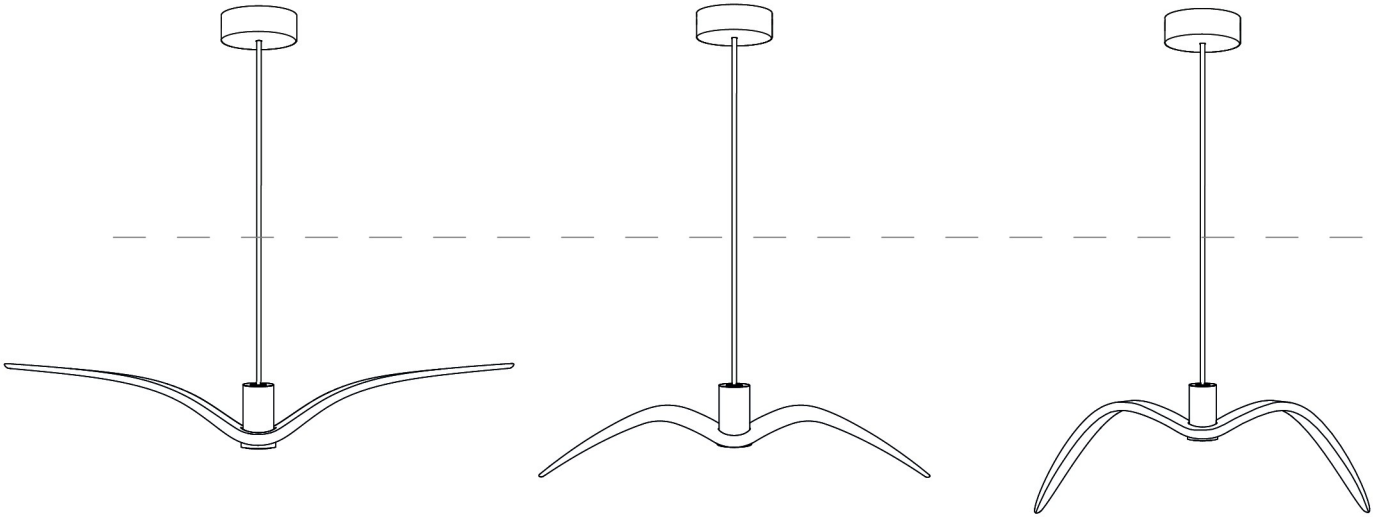

8. **ADDITIONAL LEVELLING 1/3**

ONLY IF FURTHER LEVELLING OF THE LIGHT IS REQUIRED.

Use circlip pliers (not included) to loosen the nut.

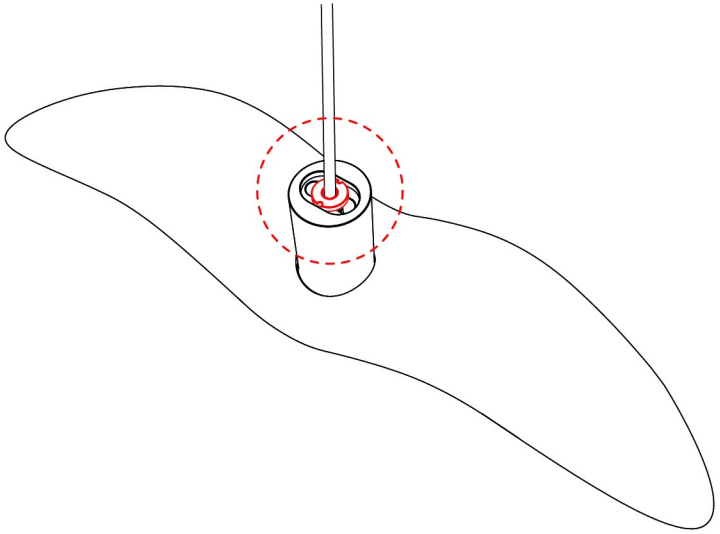

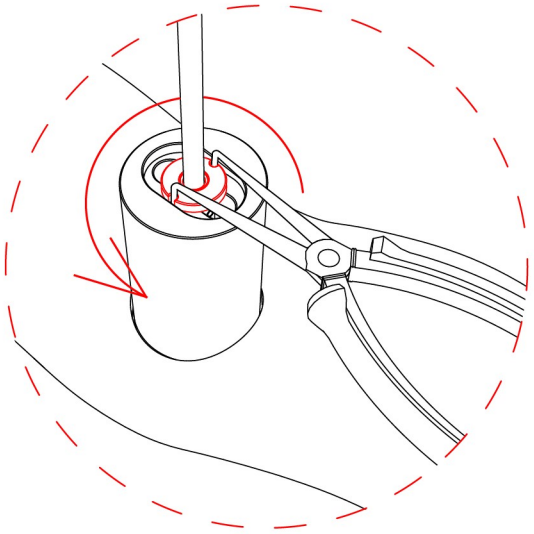

## 9. **ADDITIONAL LEVELLING 2/3**

Rotate the fixture to bring the glass into a horizontal position.
Finalise levelling by adjusting the position of the nut.

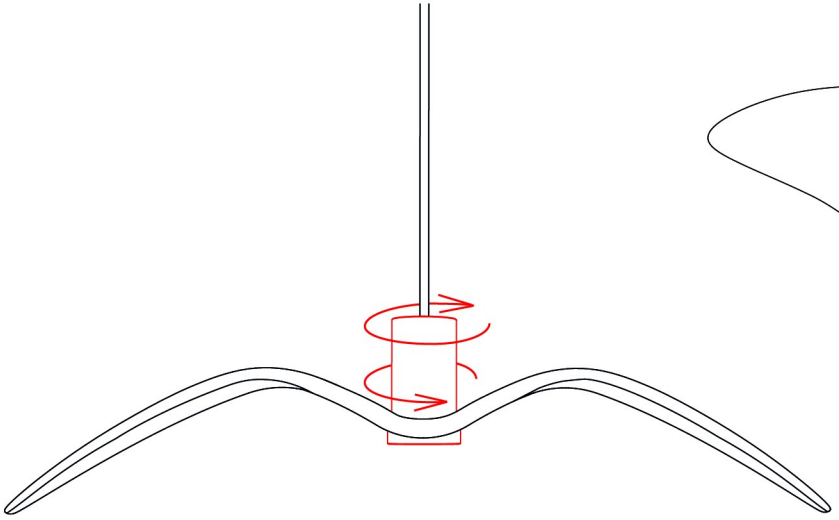

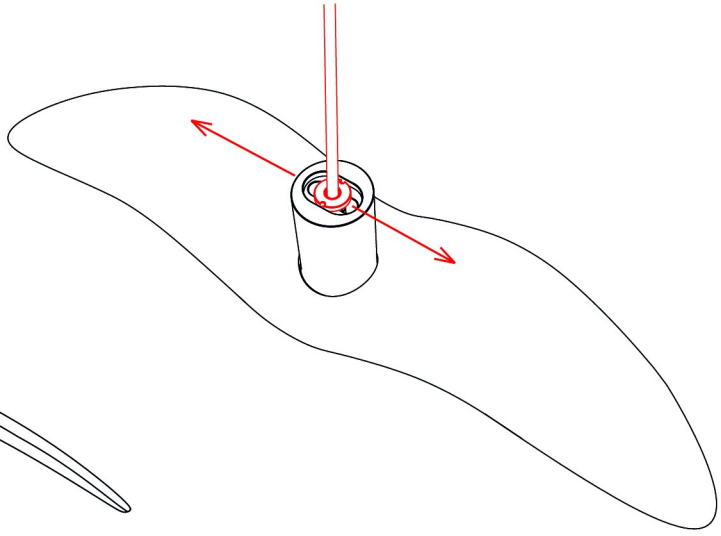

10. **ADDITIONAL LEVELLING 3/3**

Use circlip pliers (not included) to retighten the nut.

