
Umbra bomma







Umbra boomma





Umbra Inspiration

There is no shadow without light

Inspired by the relationship between geometric objects and their shadows, the Umbra collection features elegant pendants in sophisticated detail. Its metal plate derives from the perfectly elliptical shadow cast by a side-lit ball, mirroring the colorful mouth-blown crystal piece.

Design by Studio Dechem

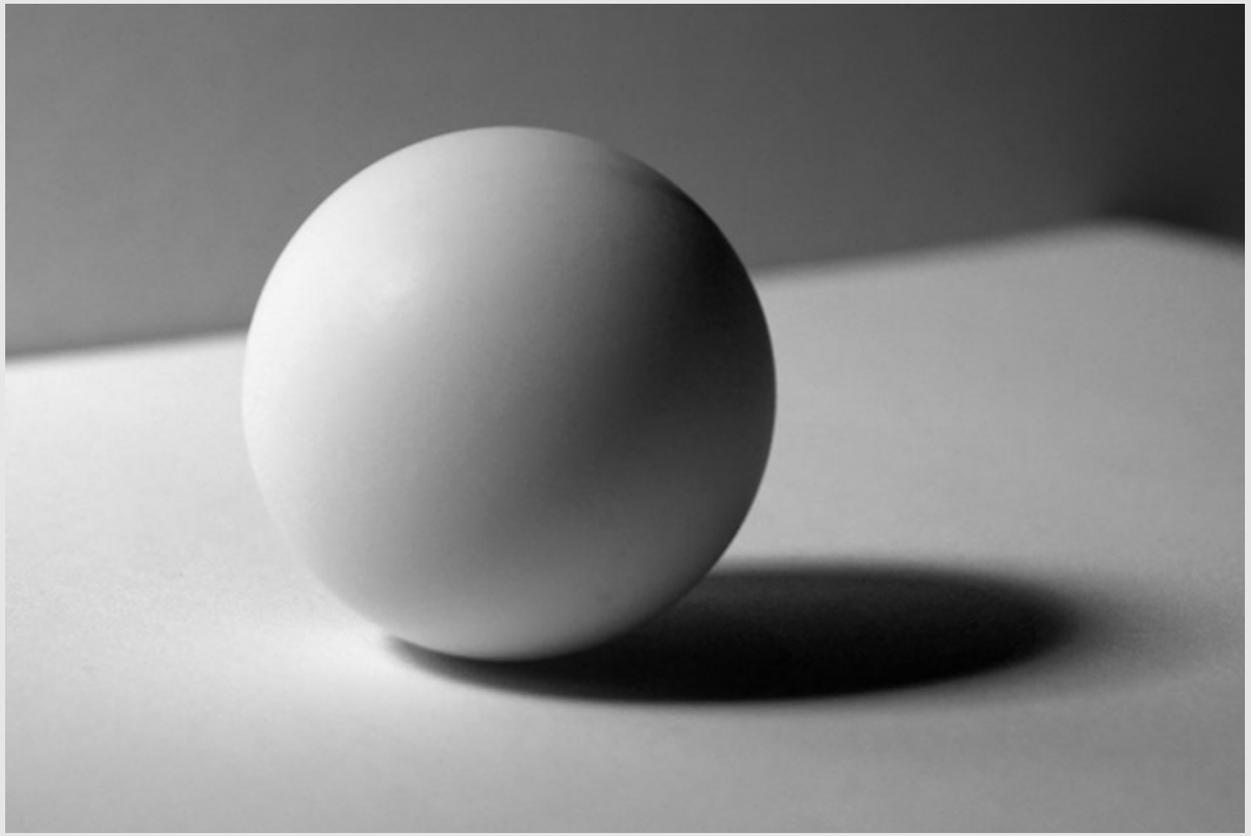



Umbra Production

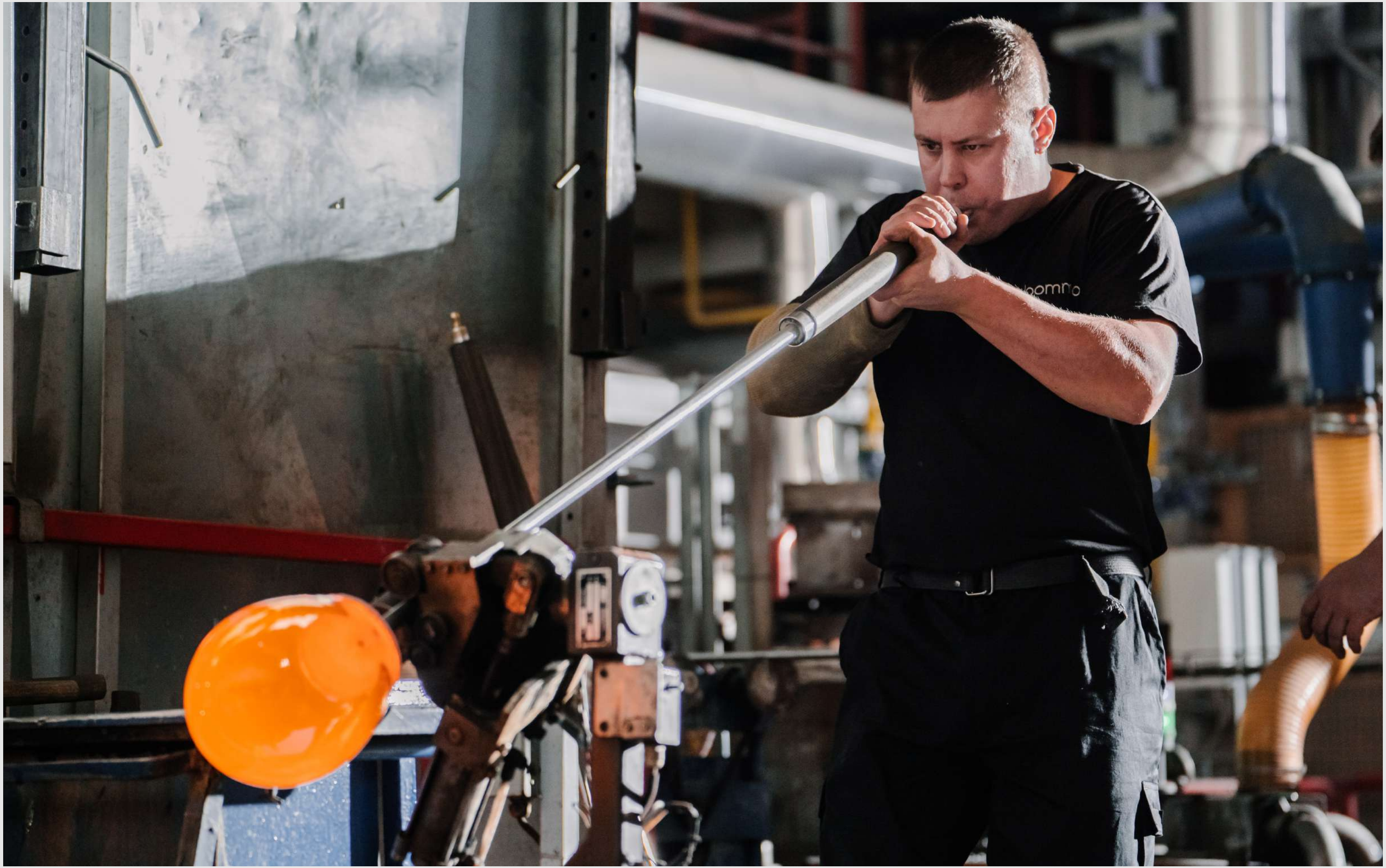
boomma

Umbra Projects









Umbra bomma Apartment in Malaga, Spain, Interior by La Albaida Canape by SOFFA, Prague, 2019



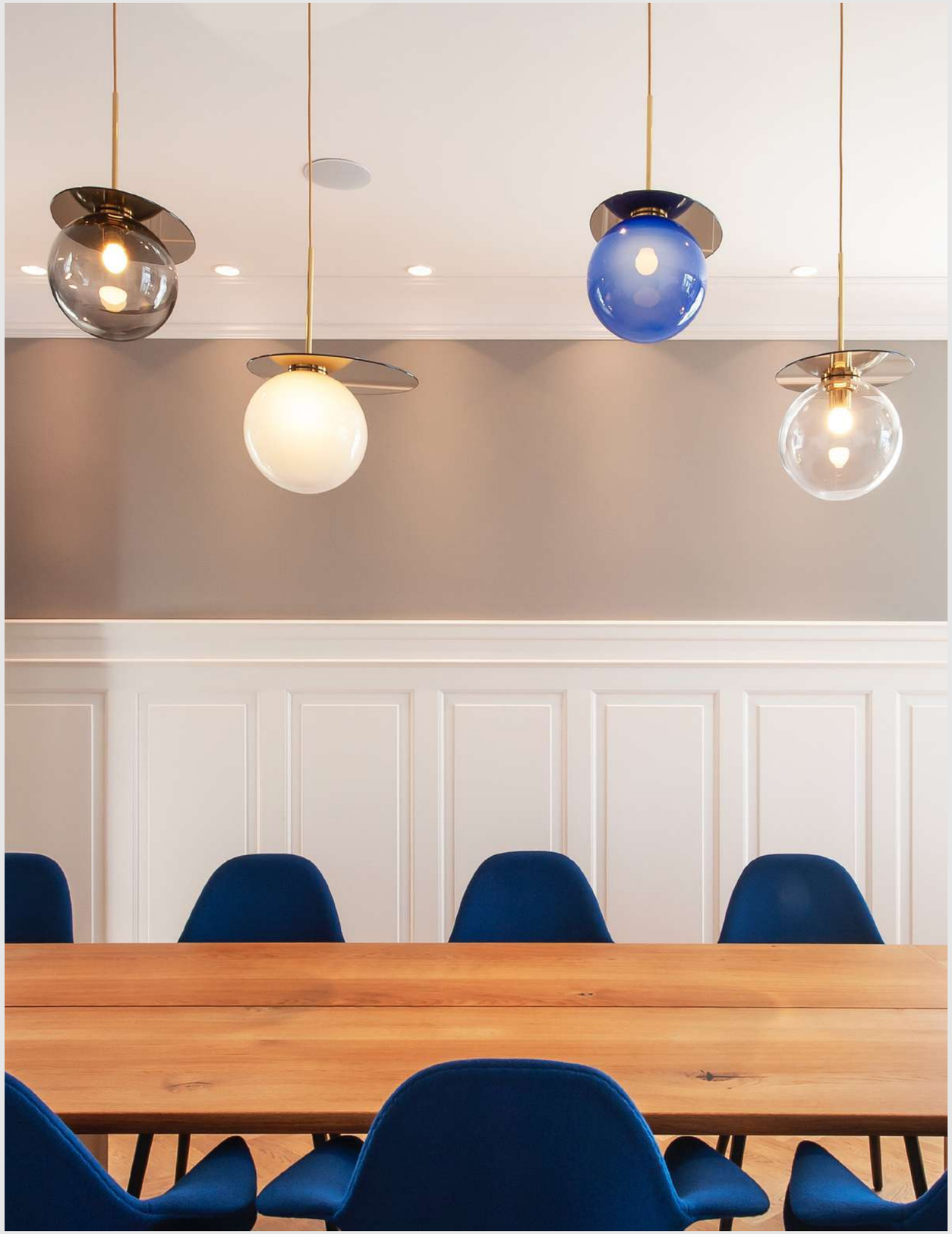

Umbra bomma

Holiday house, New york

Anker&co project, Denmark, 2022





Umbra boomma Private residence, Prague, 2019



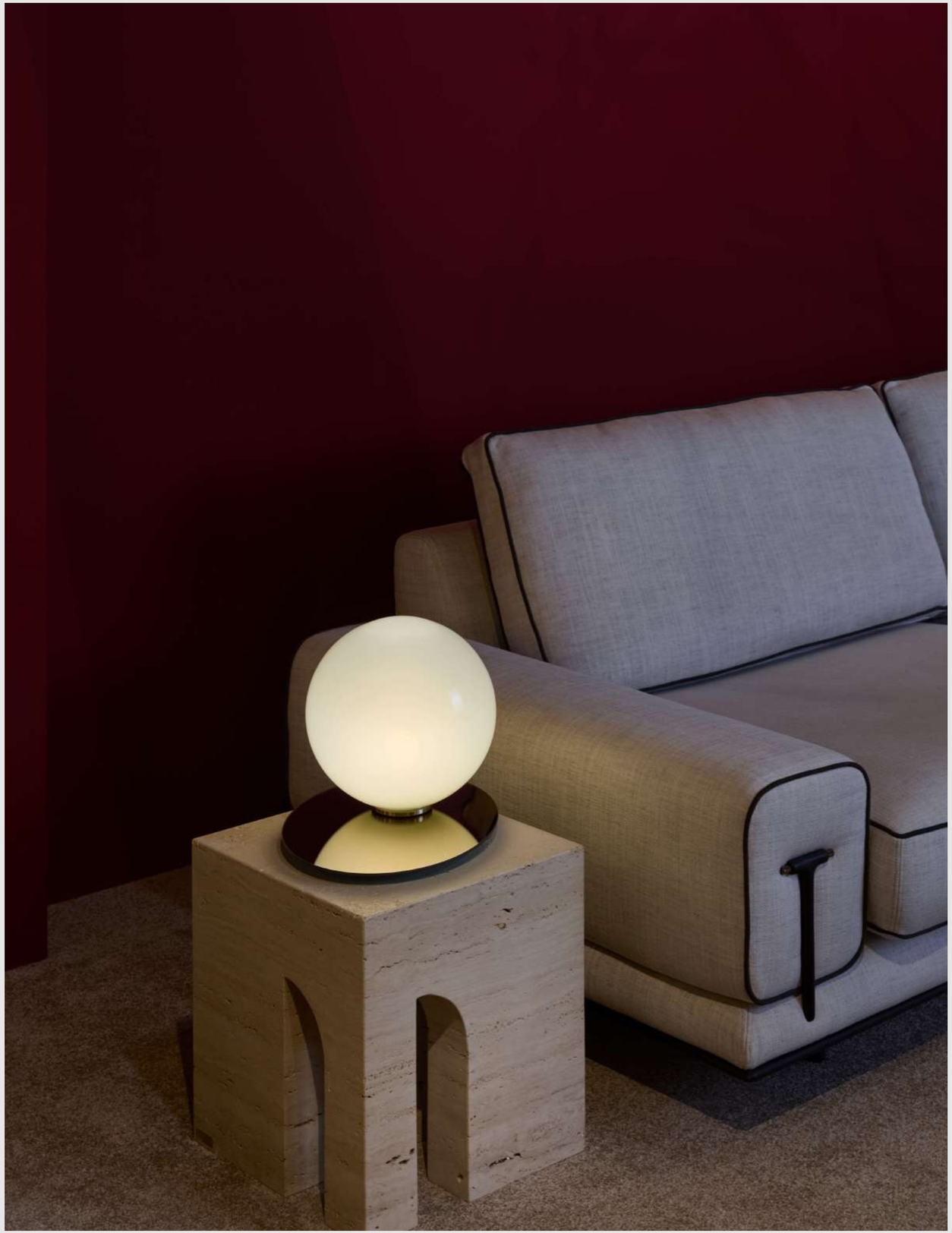

Umbra bomma Composition of 11pcs Euroluce 2025

Umbra Options

Options

Pendant

Glass options
light grey
pink
clear
smoke

Fitting options
gold



Umbra boomma

Light grey / Gold

Pink / Gold

Clear / Gold

Smoke / Gold

Options

Wall & ceiling

Glass options
light grey
pink
clear
smoke

Fitting options
gold

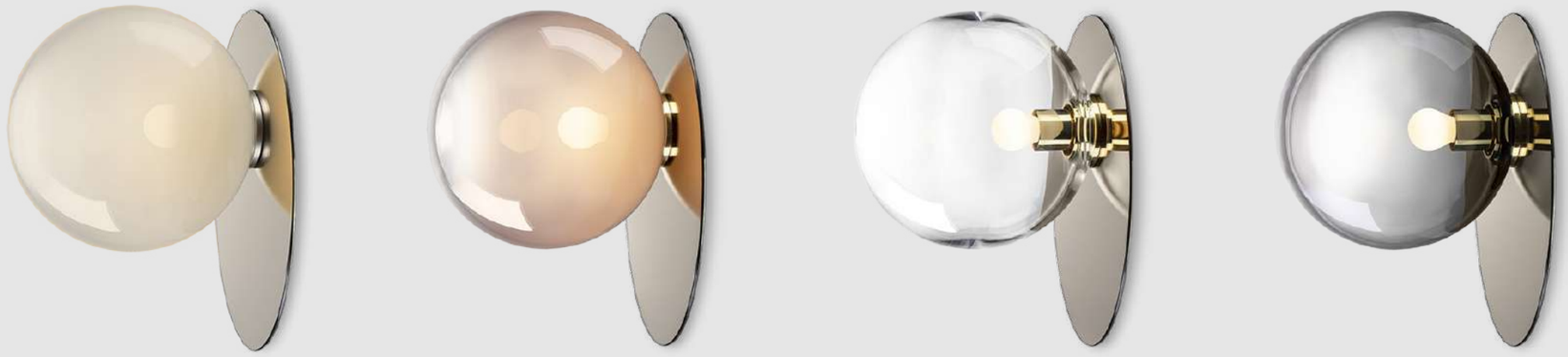

Light grey / Gold

Pink / Gold

Clear / Gold

Smoke / Gold

Options

Table

Glass options
light grey
pink
clear
smoke

Fitting options
gold



Umbra boomma

Light grey / Gold

Pink / Gold

Clear / Gold

Smoke / Gold

Umbra

Technical Information

UMBRA pendant

Design by
Dechem Studio

Handmade glass attributes

All Bomma products are hand-made from mouth-blown lead-free crystal. Therefore any small bubbles, non-melts and irregularities in the glass are both proof and a characteristic feature of this traditional craft.

The Umbra Collection is made by underlying colored glass technology. Thanks to the manual process of blowing underlay glass, each piece is an original. Individual products may vary slightly in intensity, hue or even color. This is an accompanying characteristic of the traditional underlay glass technology.

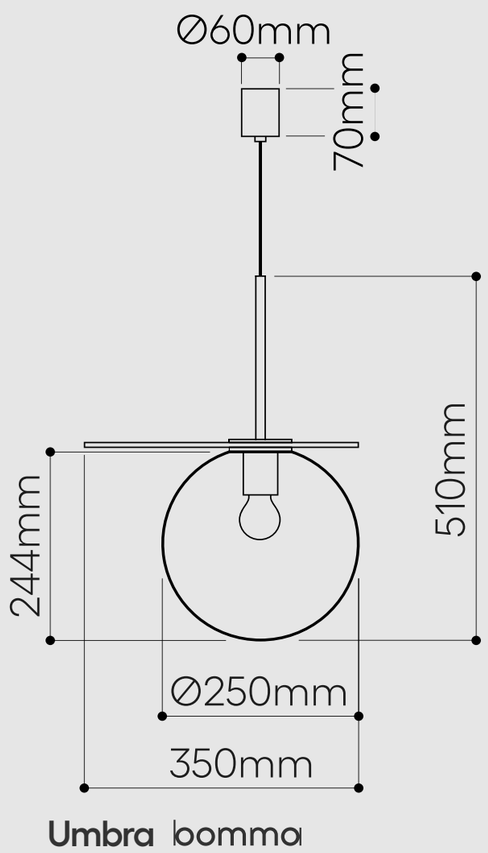

Umbra bomma

LIGHTING DESCRIPTION

Size	350 × 270 × 510 mm 13,8 × 10,6 × 20,1 inch
Cable	moca textile braid 2,5 m / 98,4 inch
Weight	+- 5 kg / 12,5 lb
Glass	mouth-blown lead-free crystal in smoke grey, pink, clear and light grey
Mounting	brushed gold (brushed stainless steel gold nitridated)
Protection	IP 20
Nominal voltage	220-240V / A.C. 50 hz (EU) 110-120 V / A.C. 60 Hz (USA)
Class	II. EU / I. USA

LIGHT SOURCE

Type	G45, 4W LED, 310 lm
Base	E27 (EU) / E26 (USA)
Wattage	max. 13W
Temperature	2700 K
Color index	RA 90+
Dimming	Dimmable with TRIAC ; on demand dimmable with DALI, RF/WIFI, for information on dimming with other systems please contact your Bomma partner.

PACKAGING

Material	Cardboard
Size	370 × 370 × 495 mm 14,6 × 14,6 × 19,5 inch

Origin: traditionally produced in the Czech Republic
Intellectual property license holder: Bomma Czech Republic (EU)
Represented by BMRC group s.r.o.

CERTIFICATES

UMBRA
wall & ceiling lighting

Design by
Dechem Studio

Handmade glass attributes

All Bomma products are hand-made from mouth-blown lead-free crystal. Therefore any small bubbles, non-melts and ir-regularities in the glass are both proof and a characteristic feature of this traditional craft.

The Umbra Collection is made by underlying colored glass technology. Thanks to the manual process of blowing underlay glass, each piece is an original. Individual products may vary slightly in intensity, hue or even color. This is an accompanying characteristic of the traditional underlay glass technology.

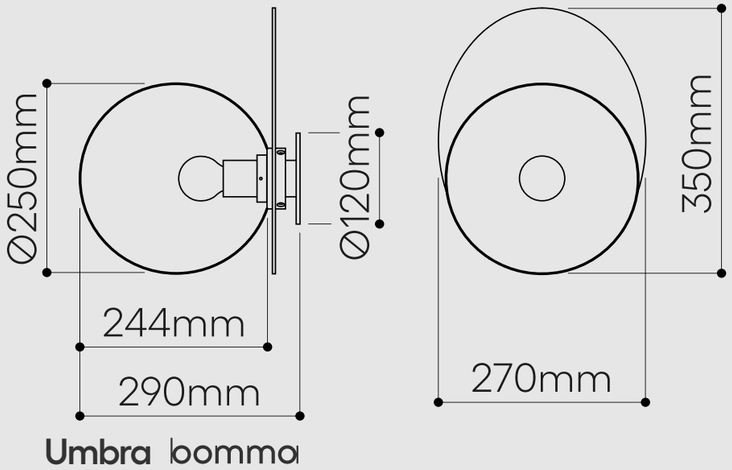

LIGHTING DESCRIPTION

Size	350 × 270 × 290 mm 13,8 × 10,6 × 11,4 inch
Weight	+- 4,5 kg / 9,9 lb
Glass	mouth-blown lead-free crystal in smoke grey, pink, clear and light grey
Mounting	brushed gold (brushed stainless steel gold nitridated)
Protection	IP 20
Nominal voltage	220-240V / A.C. 50 hz (EU) 110-120 V / A.C. 60 Hz (USA)
Class	II. EU / I. USA

LIGHT SOURCE

Type	G45, 4W LED, 310 lm
Base	E27 (EU) / E26 (USA)
Wattage	max. 13W
Temperature	2700 K
Color index	RA 90+
Dimming	Dimmable with TRIAC ; on demand dimmable with DALI, RF/WIFI, for information on dimming with other systems please contact your Bomma partner.

PACKAGING

Material	Cardboard
Size	370 × 370 × 495 mm 14,6 × 14,6 × 19,5 inch

Origin: traditionally produced in the Czech Republic
Intellectual property license holder: Bomma Czech Republic (EU)
Represented by BMRC group s.r.o.

CERTIFICATES

UMBRA table lamp

Design by
Dechem Studio

Handmade glass attributes

All Bomma products are hand-made from mouth-blown lead-free crystal. Therefore any small bubbles, non-melts and irregularities in the glass are both proof and a characteristic feature of this traditional craft.

The Umbra Collection is made by underlying colored glass technology. Thanks to the manual process of blowing underlay glass, each piece is an original. Individual products may vary slightly in intensity, hue or even color. This is an accompanying characteristic of the traditional underlay glass technology.

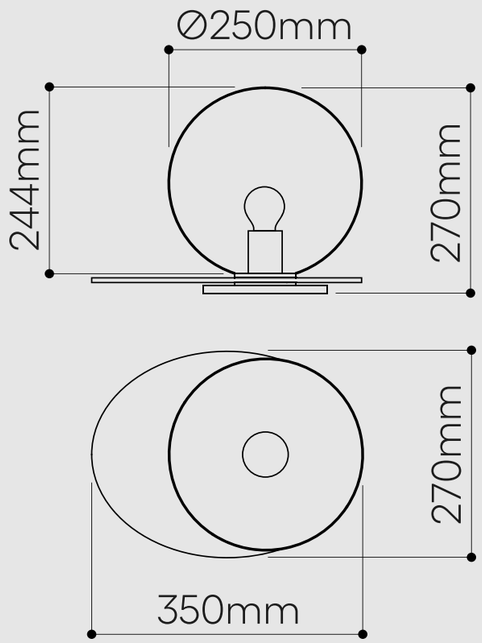

Umbra bomma

LIGHTING DESCRIPTION

Size	350 × 270 × 270 mm 13,8 × 10,6 × 10,6 inch
Cable	black textile braid 1,8 m / 70,8 inch
Weight	+- 4,5 kg / 9,9 lb
Glass	mouth-blown lead-free crystal in smoke grey, pink, clear and light grey
Mounting	brushed gold (brushed stainless steel gold nitridated)
Protection	IP 20
Nominal voltage	220-240V / A.C. 50 hz (EU) 110-120 V / A.C. 60 Hz (USA)
Class	II. EU / I. USA

LIGHT SOURCE

Type	G45, 4W LED, 310 lm
Base	E27 (EU) / E26 (USA)
Wattage	max. 13W
Temperature	2700 K
Color index	RA 90+
Dimming	Dimmable with TRIAC ; on demand dimmable with DALI, RF/WIFI, for information on dimming with other systems please contact your Bomma partner. Dimmer within the power cable.

PACKAGING

Material	Cardboard
Size	370 × 370 × 495 mm 14,6 × 14,6 × 19,5 inch

Origin: traditionally produced in the Czech Republic
Intellectual property license holder: Bomma Czech Republic (EU)
Represented by BMRC group s.r.o.

CERTIFICATES

step beyond

BOMMA BMRC Group s.r.o. Pod dráhou 1638/7 Prague 7, 170 00 Czech Republic info@bomma.cz