Soap mini boomma





Soap mini bomma





Soap mini bomma

Soap mini Inspiration

The magical quality of iridescence

Varied colors, transparency and continuously changing shapes – the characteristic features of soap bubbles-- inspired this BOMMA collection. The entire collection is produced using the technique of hand-blowing without a form. The Soap Mini collection allows unlimited space for your creativity, with the option to create as large groups of crystal drops as you fancy – from smaller compositions to expansive light constellations.

Design by Ota Svoboda



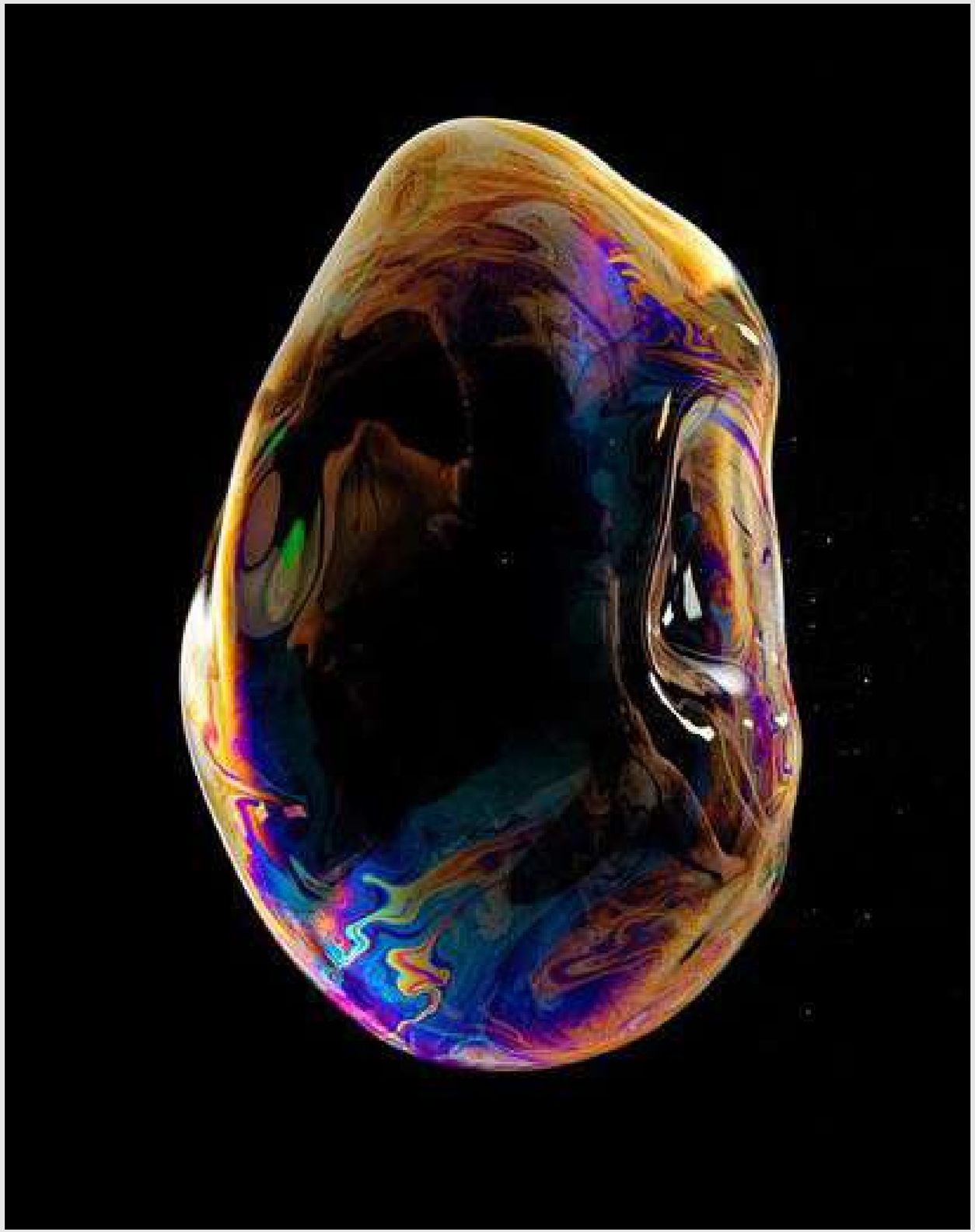

Soap mini bomma

Soap mini Production



Soap mini boomma

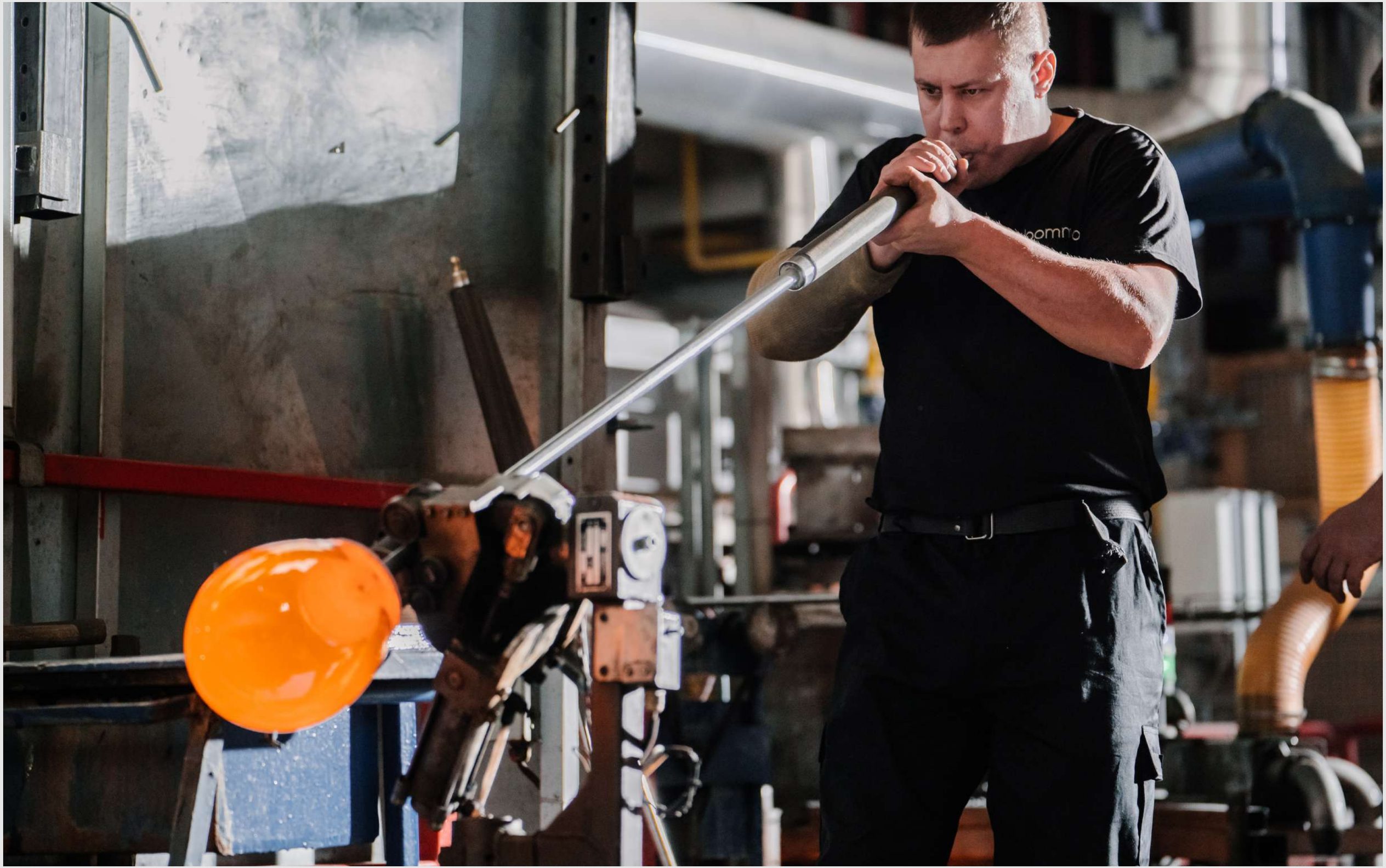

Soap mini boomma

Soap mini Projects

Soap mini bomma Euroluce 2025





Soap mini bomma Euroluce 2023 Ghazala bay villa, Egypt



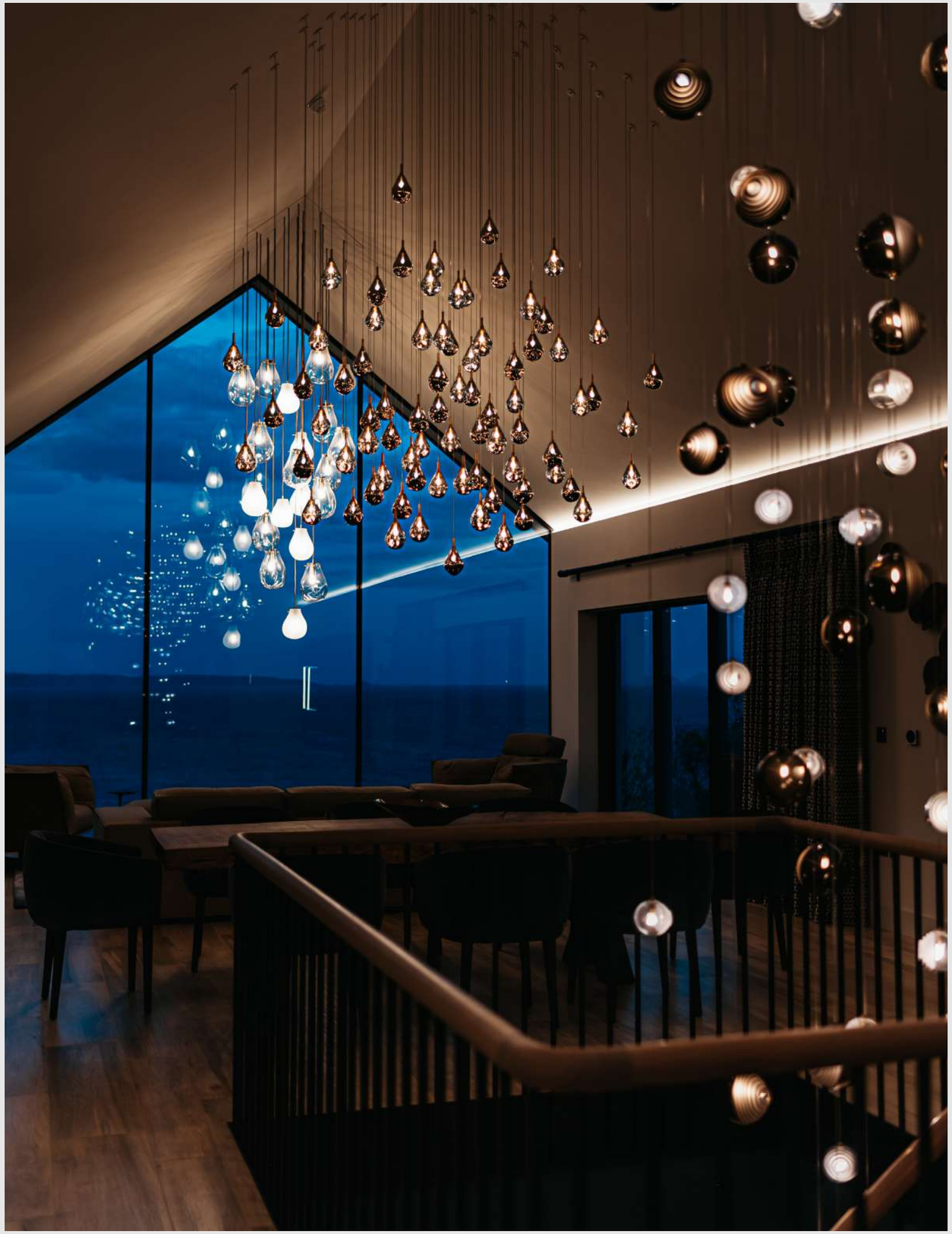

Soap mini office, installation of 62 pcs

Private villa, Channel Islands, 2023, Interior by Bonsai group



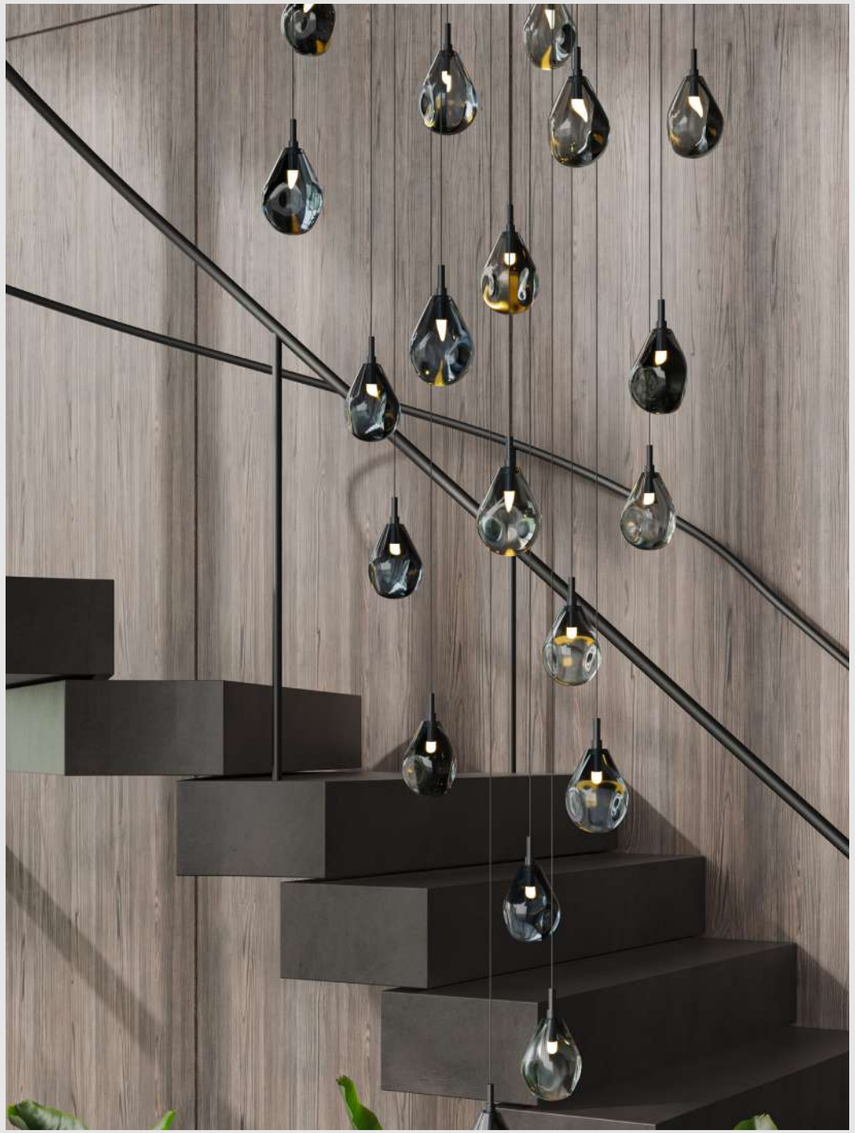

Soap mini bomma Soap mini, installation of 77 pcs, 2022





Soap mini bomma Fairmont Golden Prague hotel, Czech republic





Soap mini bomma Dining area in metallic tones, Soap Mini





Soap mini bomma Soap mini private residence, installation of 342 pcs BOMMA catalog 2023



Soap mini bomma

Dining area in metallic tones, Soap Mini

Soap mini Options

Options

Pendant

Glass options
pearl
clear
blue
frosted
gold
silver

Fitting options
brushed gold
anthracite



Pearl / Brushed gold



Clear / Anthracite



Blue / Brushed gold



Frosted / Anthracite



Gold / Brushed gold



Silver / Anthracite

Options

Wall

Glass options
pearl
clear
blue
frosted
gold
silver

Fitting options
brushed gold
anthracite



Pearl / Brushed gold



Clear / Anthracite



Blue / Anthracite



Frosted / Anthracite



Gold / Anthracite



Silver / Anthracite

Soap mini

Technical Information

SOAP MINI pendant

Design by
Ota Svoboda

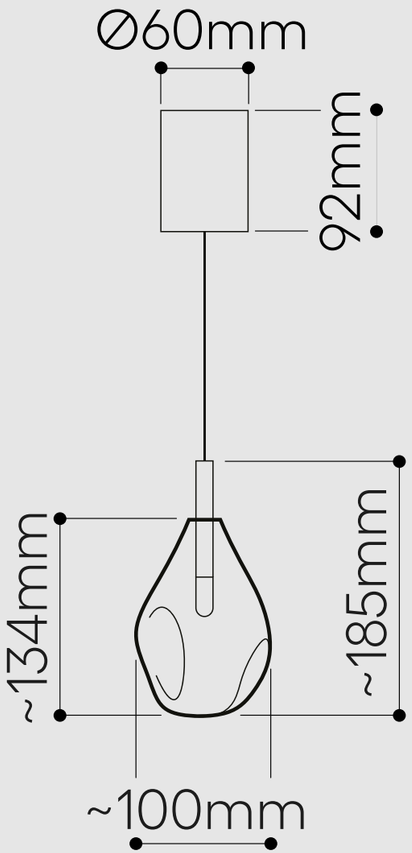

Handmade glass attributes

All Bomma products are hand-made from mouth-blown lead-free crystal. Therefore any small bubbles, non-melts and irregularities in the glass are both proof and a characteristic feature of this traditional craft.

The intensity and color shade of metal-coated glass may vary slightly from product to product. Small dots in the coating, especially visible after the light is on, are not a defect of the product.

When installing and cleaning, touch the coated glass only with the gloves supplied. Failure to do so could cause irreversible damage to the surface. Never use liquid solutions or chemical cleaners to clean the metal-coated glass. Wipe the surface with a soft, dry cloth only.

LIGHTING DESCRIPTION

Size	dia. 100 mm, H 185 mm dia. 3,9, inch H 7,3 inch
Cable	transparent 2,5 m / 98,4 inch
Weight	+- 0,25 kg / 0,48 lb
Glass	mouth-blown lead-free crystal in clear, frosted or with metal coating in silver, gold and blue
Mounting	anthracite (brass and galvanized black nickel) brushed gold (brushed brass)
Protection	IP 20
Nominal voltage	220-240V / A.C. 50 hz (EU) 110-120 V / A.C. 60 Hz (USA)
Class	III. EU / II. USA

LIGHT SOURCE

Type	G4, 1,2W LED, 100 lm
Base	G4 (EU) / G4 (USA)
Voltage	12V, AC
Temperature	2700 K
Color index	RA 90+
Dimming	EU/Other versions - dimmable in constellations, non dimmable as a single pendant. UL/The Americas - dimmable in constellations and as a single pendant.

TRANSFORMER

Primary	100-240V, 50/60 Hz, 0,04A
Secondary	DC 700mA (0,5V–4V) 1×3W

PACKAGING

Material	Cardboard
Size	195 × 170 × 170 mm 7,6 × 6,6 × 6,6 inch

Origin: traditionally produced in the Czech Republic
Intellectual property license holder: Bomma Czech Republic (EU)
Represented by BMRC group s.r.o.

CERTIFICATES

SOAP MINI wall

Design by
Ota Svoboda

Handmade glass attributes

All Bomma products are hand-made from mouth-blown lead-free crystal. Therefore any small bubbles, non-melts and irregularities in the glass are both proof and a characteristic feature of this traditional craft.

The intensity and color shade of metalcoated glass may vary slightly from product to product. Small dots in the coating, especially visible after the light is on, are not a defect of the product.

When installing and cleaning, touch the coated glass only with the gloves supplied. Failure to do so could cause irreversible damage to the surface. Never use liquid solutions or chemical cleaners to clean the metal-coated glass. Wipe the surface with a soft, dry cloth only.

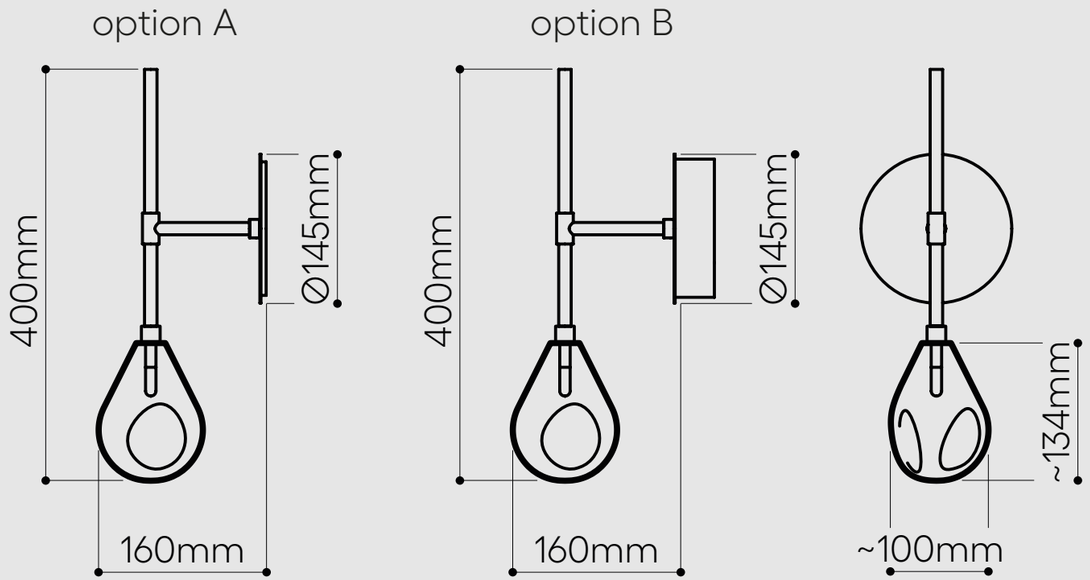

LIGHTING DESCRIPTION	
Size	100 × 160 (194) × 400 mm 3,94 × 6,3 (7,6) × 15,75 inch
Weight	+- 1,25 kg / 2,76 lb
Glass	mouth-blown lead-free crystal in clear, frosted or with metal coating in silver, gold and blue
Mounting	brushed silver (brushed stainless steel) brushed gold (brushed stainless steel gold nitridated)
Recommended junction box	EU - A.UK1-SH (72mm dia, 60mm min. depth) UL/The Americas - electrical box, Octagon, 4 X 4 inch (1,4 inch min. depth)
Protection	IP 20
Nominal voltage	220-240V / A.C. 50 hz (EU) 110-120 V / A.C. 60 Hz (USA)
Class	II. EU / I. USA

LIGHT SOURCE	
Type	G4, 1,2W LED, 100 lm
Base	G4 (EU) / G4 (USA)
Voltage	12VDC, 100mA
Temperature	2700 K
Color index	RA 90+
Dimming	EU/Other versions - non-dimmable UL/The Americas - TRIAC, ELV

TRANSFORMER	
Primary circuit	100-240V, 50/60 Hz,
Secondary circuit	12VDC, +-0,5A, 5W

PACKAGING	
Material	Cardboard
Size	220 × 220 × 250 mm 8,6 × 8,6 × 9,8 inch

Origin: traditionally produced in the Czech Republic
Intellectual property license holder: Bomma Czech Republic (EU)
Represented by BMRC group s.r.o.

CERTIFICATES

step beyond

BOMMA BMRC Group s.r.o. Pod dráhou 1638/7 Prague 7, 170 00 Czech Republic info@bomma.cz