soap 10x

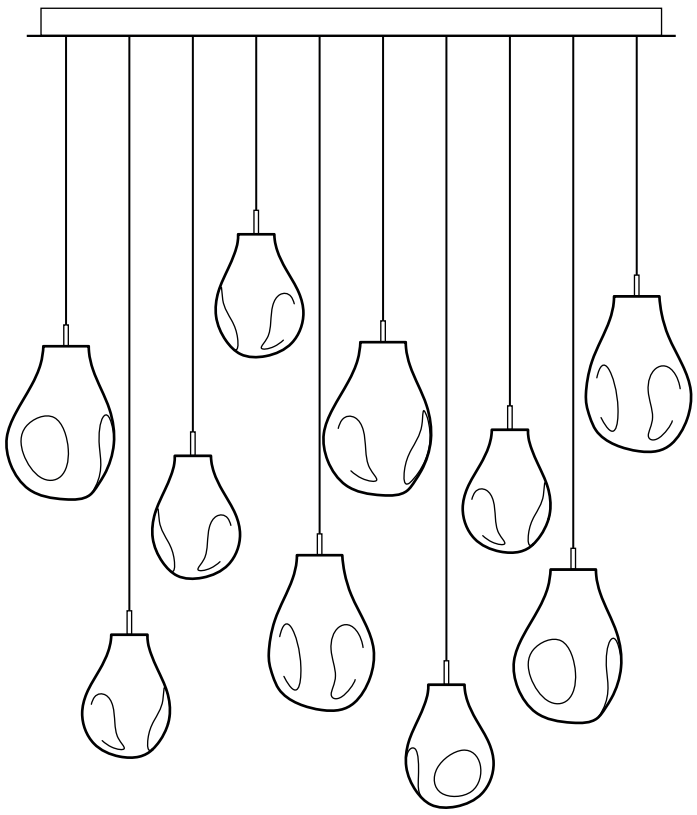

bomma

10 pcs on Rectangular Canopy
Installation Manual

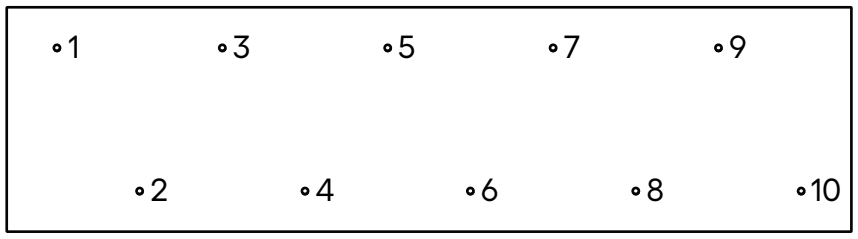

canopy height: 62 mm
canopy weight: 22 kg
total weight of this assembly: ~43 kg

Cable lengths for different color combinations

monochromatic

1: 64cm (size L)
2: 127cm (size S)
3: 87cm (size S)
4: 38cm (size S)
5: 110cm (size L)
6: 63cm (size L)
7: 138cm (size S)
8: 82cm (size S)
9: 113cm (size L)
10: 53cm (size L)

color mix - gold, silver, blue

1: 64cm (size L, blue)
2: 127cm (size S, gold)
3: 87cm (size S, silver)
4: 38cm (size S, blue)
5: 110cm (size L, blue)
6: 63cm (size L, gold)
7: 138cm (size S, silver)
8: 82cm (size S, blue)
9: 113cm (size L, gold)
10: 53cm (size L, silver)

mix - clear, frosted

1: 64cm (size L, clear)
2: 127cm (size S, frosted)
3: 87cm (size S, clear)
4: 38cm (size S, frosted)
5: 110cm (size L, frosted)
6: 63cm (size L, clear)
7: 138cm (size S, clear)
8: 82cm (size S, frosted)
9: 113cm (size L, frosted)
10: 53cm (size L, clear)

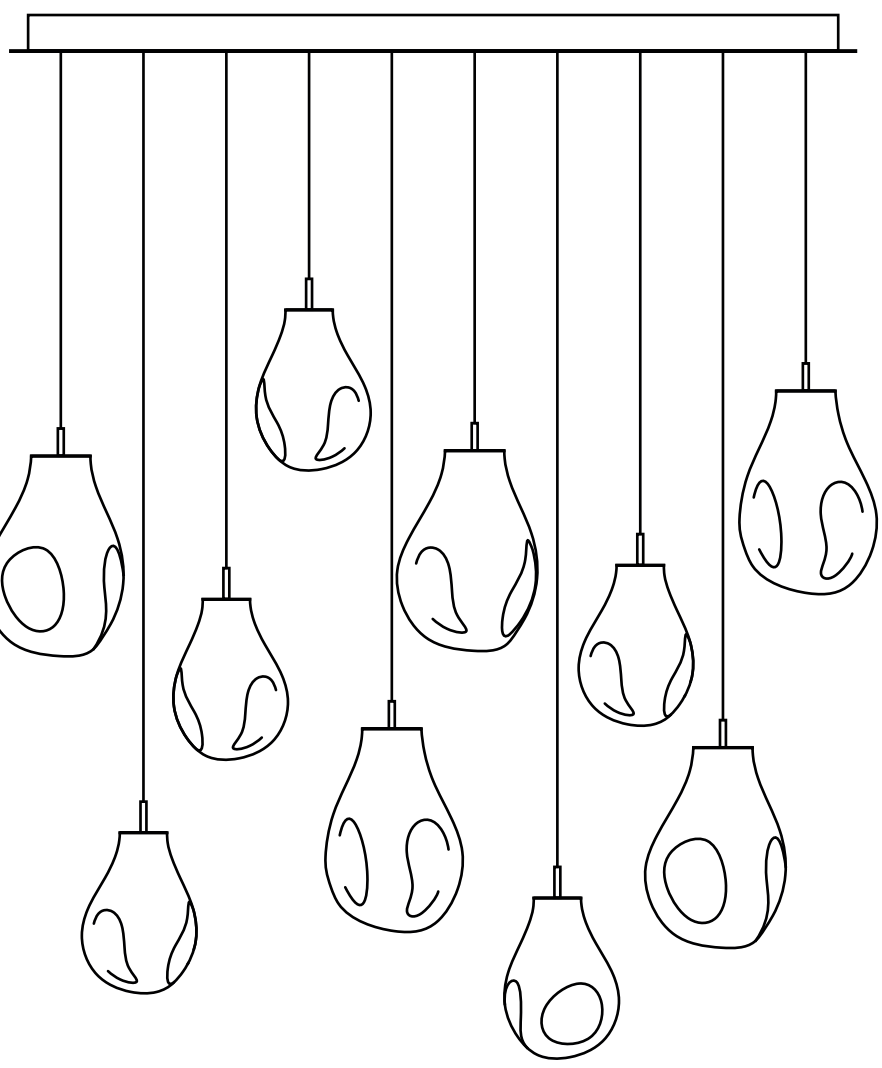

Installation Manual
for Multiple Pendant Canopy

- Please read this user's manual carefully prior to installation and follow its instructions and recommendations.
- The installation of the pendant light requires more than one person.
- For safety reasons, as well as for warranty purposes, it is forbidden to use this product in breach of this manual and other purposes stipulated in this manual.
- Prior to assembly, use an appropriate circuit breaker to turn off electricity.
- All interventions regarding the wiring of the light fixture may only be carried out by a qualified electrician.
- The producer bears no liability for damage caused by improper installation.
- The surface of the mounting may also include minor imperfections due to manual production.
- The pendant light is intended for interior lighting.
- The producer reserves the right to make minor changes to the construction of the light fixture without prior notice.

1

Slip the base-plate on the incoming power supply cable from the ceiling and attach using appropriate screws and wall-plugs, which are not included in the package. Select their size and type according to the material of your ceiling and the weight of the light fixture.

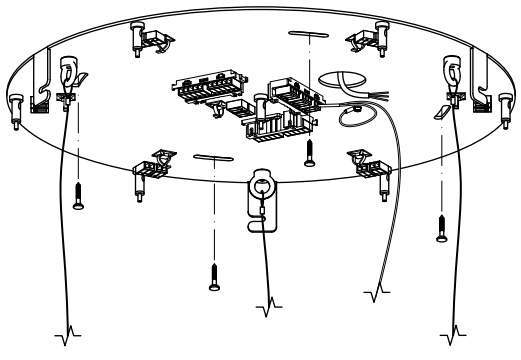

2

Shorten the cables to the required lengths (see the table on the other side), thread the cables through the canopy and the supporting steel cable insert into the reutlinger. The cable end must protrude from the side hole.

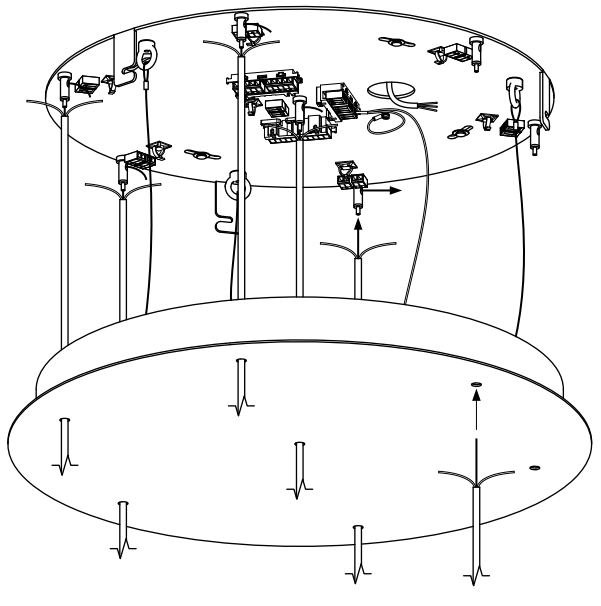

3

Perform the wiring according to the diagram. The principle of installation is the same for all canopy sizes and shapes.

cable preparation
before wiring

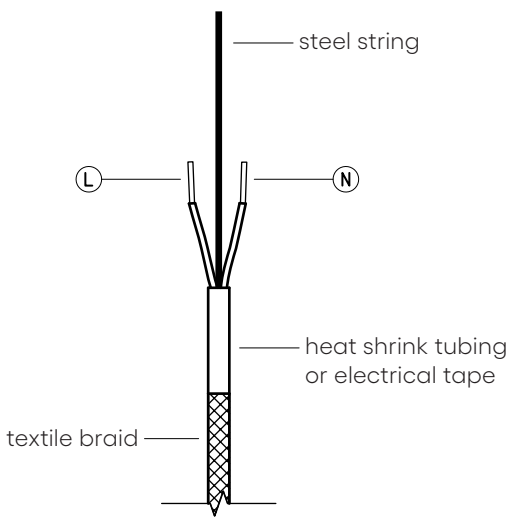

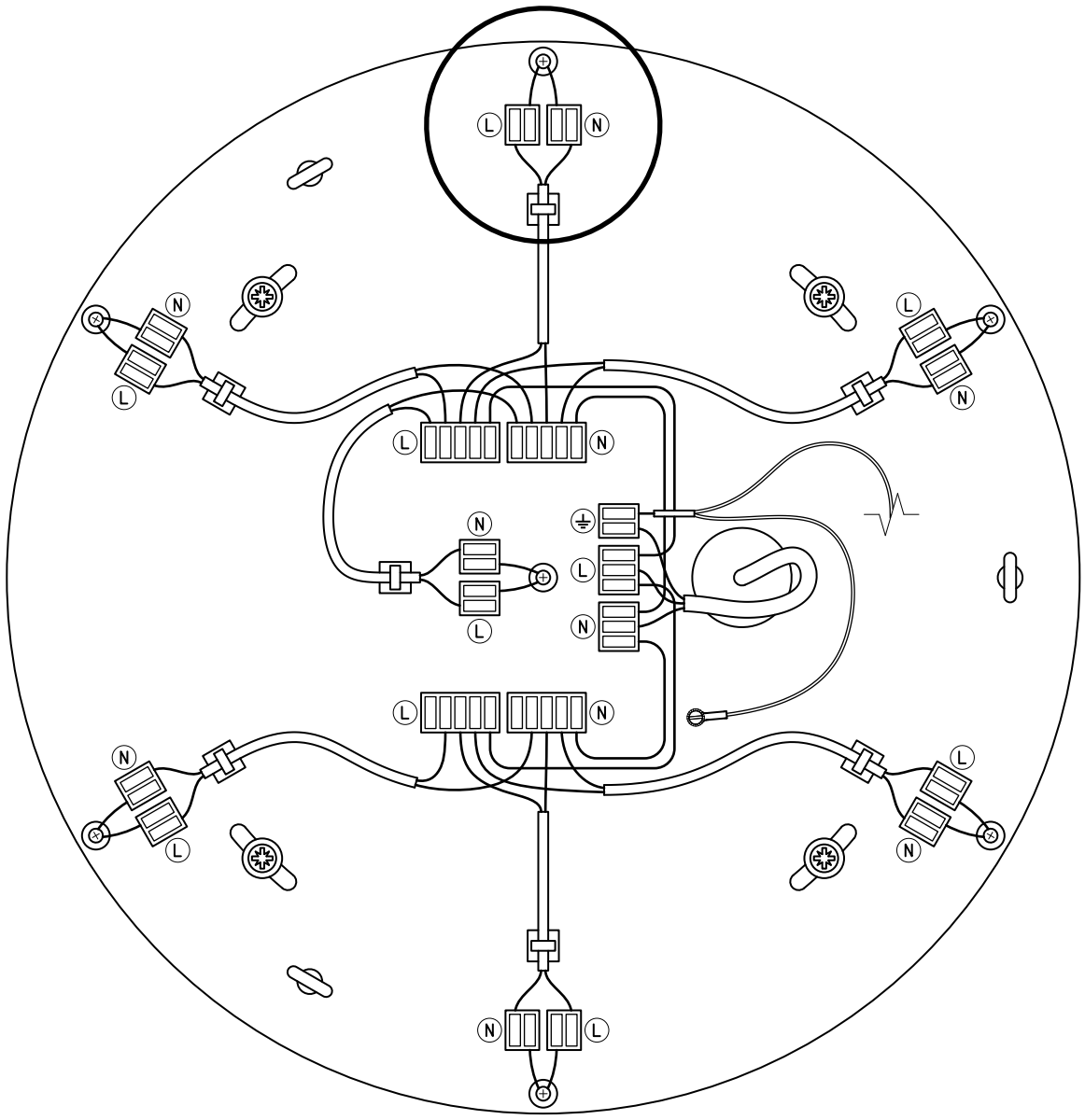

4

Lift the canopy onto the anchor plate and rotate it so that the three screws on the inside of the canopy slid into the recess in the supporting feet. If installing a rectangular canopy, slide it on the anchor plate in the direction of the arrow in the illustration.

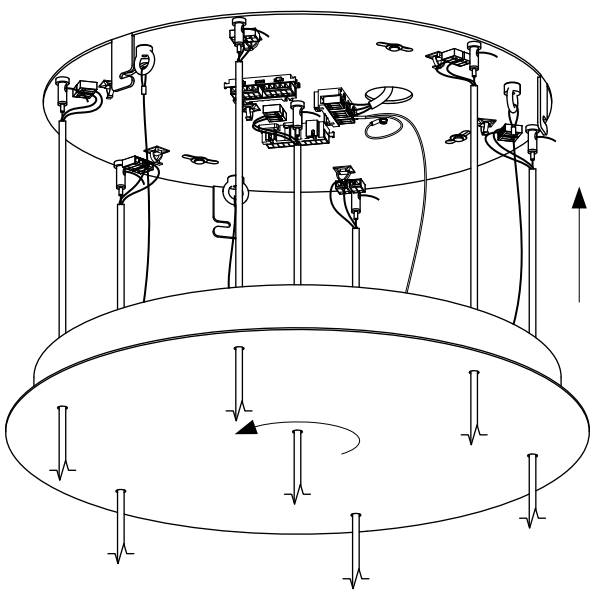

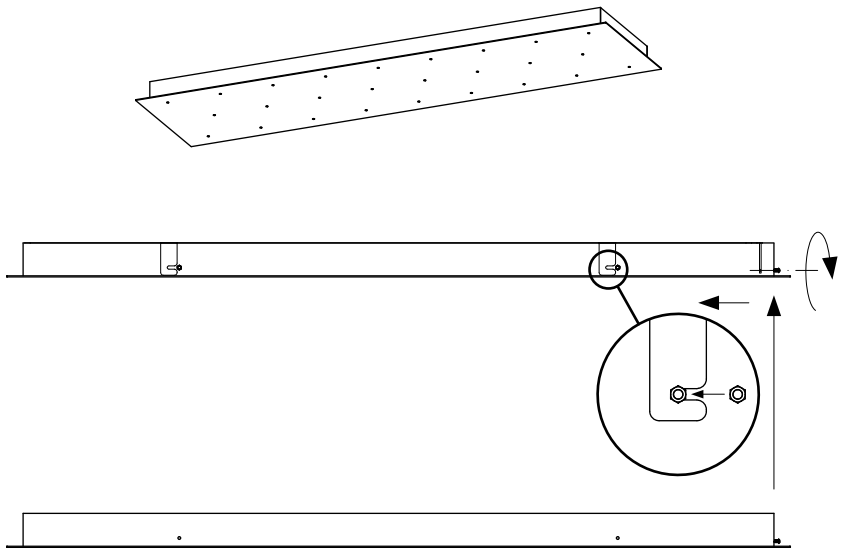

5

Screw in the locking screw completely.

