
Pyrite boomma





Pyrite bomma





Pyrite bomma







Pyrite boomma

Pyrite Inspiration

The fiery stone from the core of the Earth

This BOMMA collection was inspired by pyrite, the golden fire-stone in the shape of a perfect cube, while the silver version of the shade reflects its inspiration in salt crystals. By blowing a molten organic substance into a precise cold form, the skilled hands of our glassmakers create a unique light fixture of elemental, yet perfect shape. The gleaming surface of this hand-blown crystal cube is enclosed from three sides by a polished metal component in either silver or gold tones.

Design by Dechem Studio





Pyrite boomma





Pyrite boomma



Pyrite boomma

Pyrite Production



Pyrite boomma



Pyrite boomma





Pyrite bomma

Pyrite Projects





Pyrite bomma

Installation of 81 pcs of small and large Pyrite

Euroluce 2025, Italy, Milan, Interior by Studio Salaris and Václav Mlynář



Pyrite bomma Arlanda Airport Lounges, Sweden, Interior by WHYTE LILJA



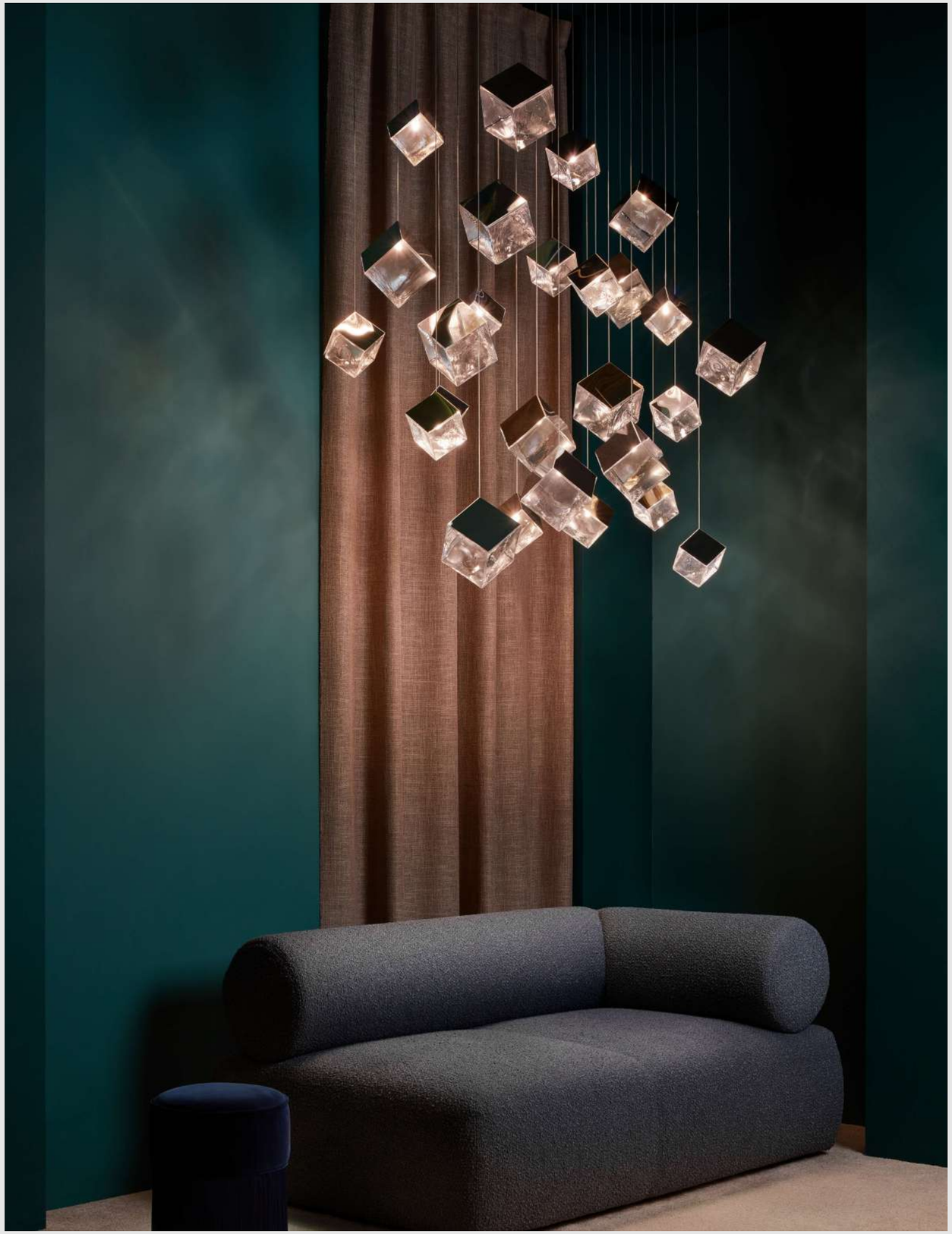

Pyrite bommal

Flanders House, Belgium, Interior by Pieter Laureys, 2023

Light+Building stand, Frankfurt, Design studio: Studio Salaris & Václav Mlynář 2024





Pyrite bomma Interior by Studio Salaris



Pyrite bomma New Headquarters of Bomma, Prague, Interior by Studio Perspektiv





Pyrite boomma

Chalets by LHM Group, Norway, 2022





Pyrite bomma

Installation of 98 pcs Pyrite

Installation of 27 pcs Pyrite



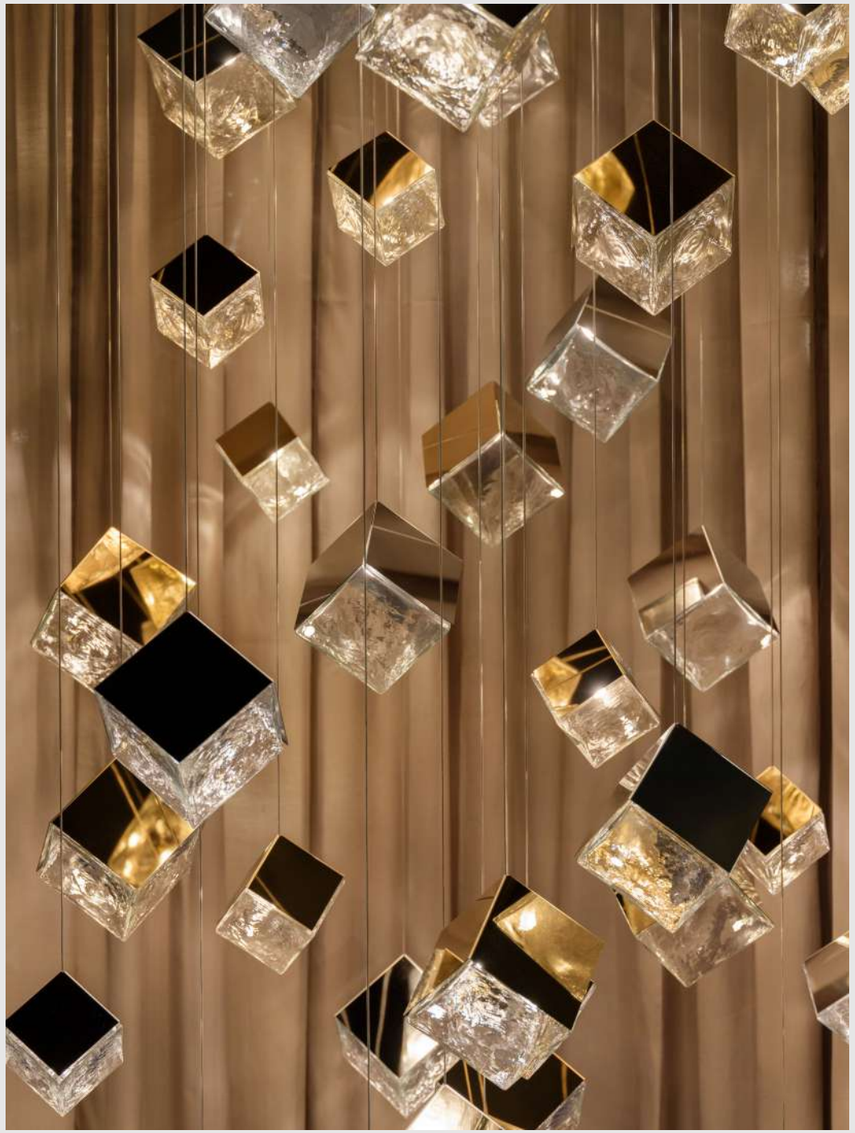

Pyrite bomma Euroluce 2023, Italy, Milan, Interior by Studio Salaris and Václav Mlynář





Pyrite bomma Installation of 36 pcs Pyrite BOMMA catalogue, 2021

Pyrite Options

Options

Pendant Large

Glass options
clear

Fitting options
silver
gold
brushed silver
brushed gold
light brushed bronze
patina gold
deopale brass



Pyrite boomma

Clear / Silver

Clear / Gold

Clear / Brushed silver

Clear / Brushed gold

Options

Pendant Large

Glass options
clear

Fitting options
silver
gold
brushed silver
brushed gold
light brushed bronze
patina gold
deopale brass

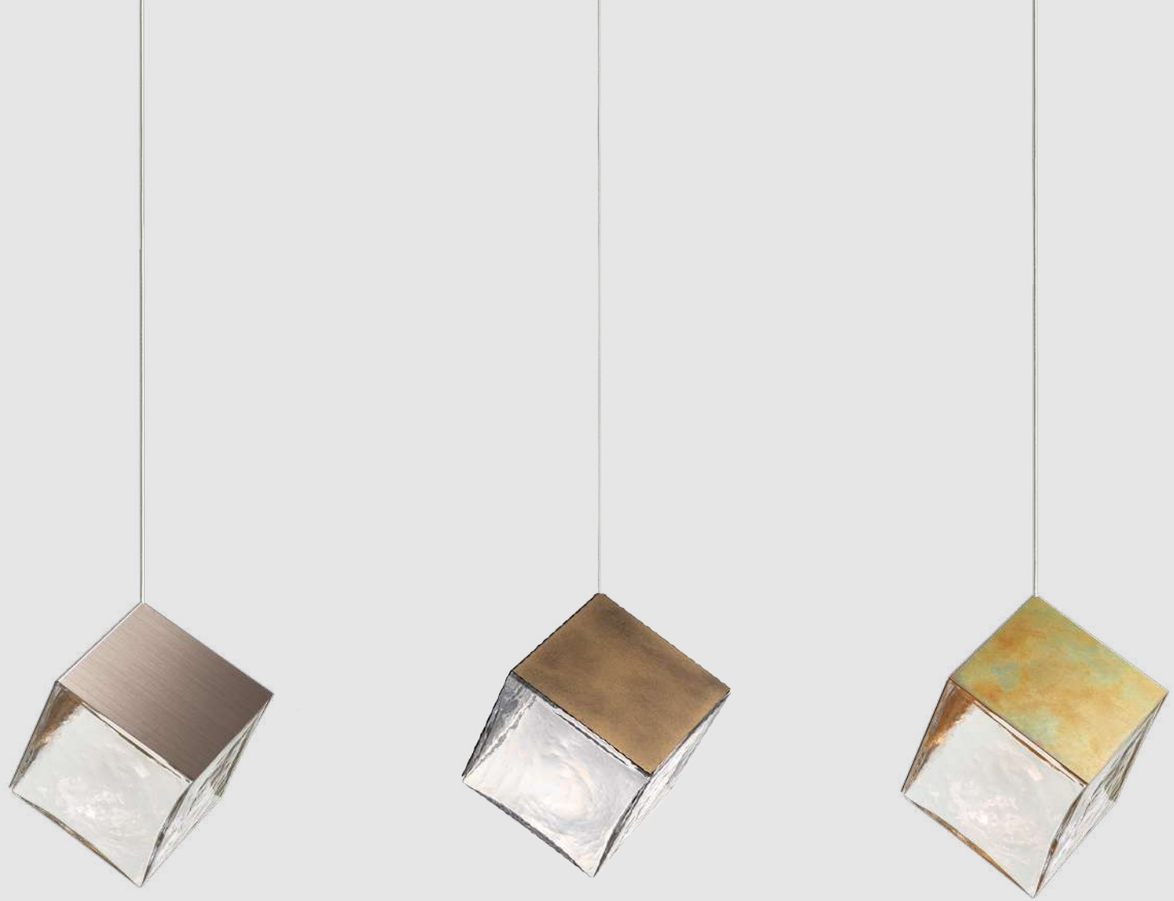

Pyrite boomma

Clear / Light brushed bronze

Clear / Patina gold

Clear / Deopale brass

Options

Pendant Small

Glass options clear

Fitting options
silver
gold
brushed silver
brushed gold
light brushed bronze
patina gold
deopale brass



Clear / Silver

Clear / Gold

Clear / Brushed silver

Clear / Brushed gold

Options

Pendant Small

Glass options clear

Fitting options
silver
gold
brushed silver
brushed gold
light brushed bronze
patina gold
deopale brass



Clear / Light brushed bronze

Clear / Patina Gold

Clear / Deopale brass

Pyrite Technical Information

PYRITE
large pendant

Design by
Studio Dechem

Handmade glass attributes

All Bomma products are hand-made from mouth-blown lead-free crystal. Therefore any small bubbles, non-melts and irregularities in the glass are both proof and a characteristic feature of this traditional craft.

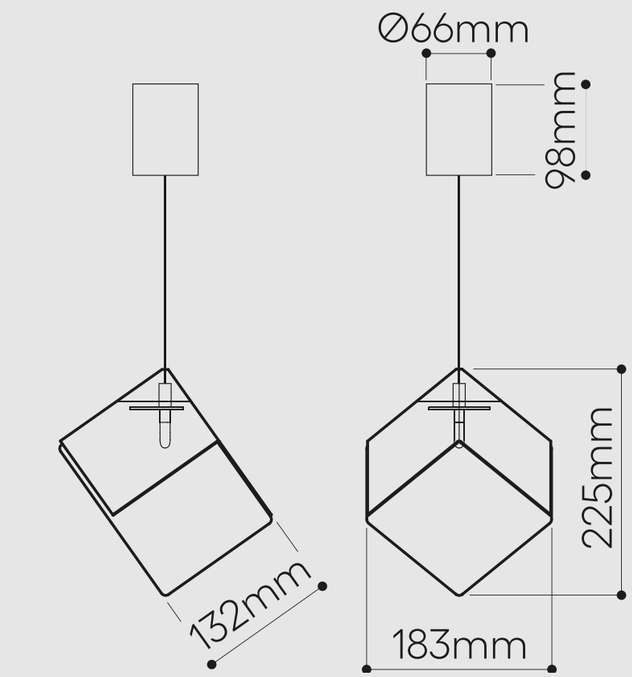

Pyrite bomma

LIGHTING DESCRIPTION

Size	183 × 209 × 225 mm 7,2 × 8,2 × 8,9 inch
Cable	transparent 2,5 m / 98,4 inch
Weight	+- 1,9 kg / 4,2 lbs
Glass	mouth-blown lead-free crystal in clear
Mounting + Metal sheet top	silver, gold, brushed silver, brushed gold, light brushed bronze, patina gold, deopale brass
Protection	IP 20
Nominal voltage	12 V DC, 50 / 60 hz
Class	III. EU / II. USA

LIGHT SOURCE

Type	G4, 1,2 W LED, 100 lm
Base	G4 (EU) / G4 (USA)
Voltage	12 V DC
Temperature	2700 K
Color index	RA 90+
Dimming	EU/Other versions - dimmable in constellations, non dimmable as a single pendant. UL/The Americas - dimmable in constellations and as a single pendant.

PACKAGING

Material	Cardboard
Size	220 × 220 × 250 mm 8,6 × 8,6 × 9,8 inch

Origin: traditionally produced in the Czech Republic
Intellectual property license holder: Bomma Czech Republic (EU)
Represented by BMRC group s.r.o.

CERTIFICATES

PYRITE
small pendant

Design by
Studio Dechem

Handmade glass attributes

All Bomma products are hand-made from mouth-blown lead-free crystal. Therefore any small bubbles, non-melts and irregularities in the glass are both proof and a characteristic feature of this traditional craft.

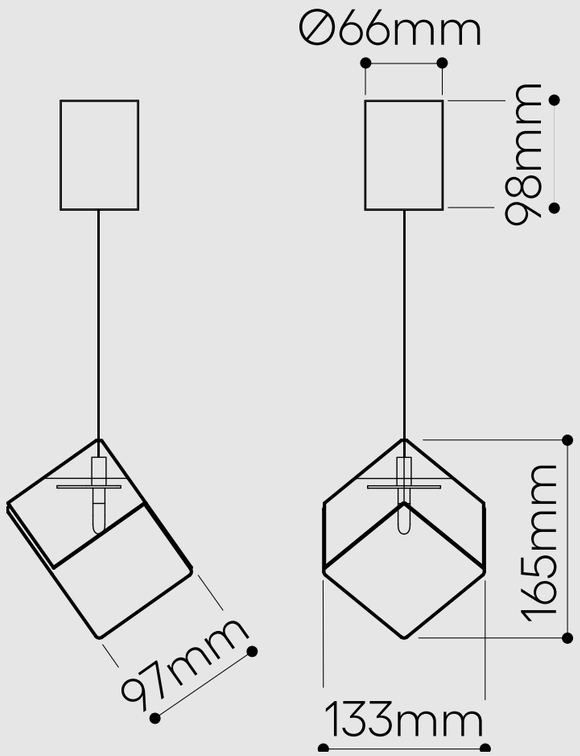

Pyrite bomma

LIGHTING DESCRIPTION

Size	133 × 153 × 165 mm 5,2 × 6 × 6,5 inch
Cable	transparent 2,5 m / 98,4 inch
Weight	+- 0,8 kg / 1,76 lbs
Glass	mouth-blown lead-free crystal in clear
Mounting + Metal sheet top	silver, gold, brushed silver, brushed gold, light brushed bronze, patina gold, deopale brass
Protection	IP 20
Nominal voltage	12 V DC, 50 / 60 hz
Class	III. EU / II. USA

LIGHT SOURCE

Type	G4, 1,2 W LED, 100 lm
Base	G4 (EU) / G4 (USA)
Voltage	12 V DC
Temperature	2700 K
Color index	RA 90+
Dimming	EU/Other versions - dimmable in constellations, non dimmable as a single pendant. UL/The Americas - dimmable in constellations and as a single pendant.

PACKAGING

Material	Cardboard
Size	180 × 180 × 200 mm 7 × 7 × 7,9 inch

Origin: traditionally produced in the Czech Republic
Intellectual property license holder: Bomma Czech Republic (EU)
Represented by BMRC group s.r.o.

CERTIFICATES

step beyond

BOMMA BMRC Group s.r.o. Pod dráhou 1638/7 Prague 7, 170 00 Czech Republic info@bomma.cz