

Beam bomma





Beam boomma

Beam Inspiration

Spotlight for bomma constellations.

Beam ensures that light installations perfectly illuminate the space beneath them wherever additional light is needed. This significantly expands the functional usability of bomma constellations. Combine the beam with standard collections from bomma constellations family: Dark and Bright Star, Lens, Fragments, Mussels, Metamorphosis, Pyrite, Soap mini and Stellar Dust.

Beam can be used also as a single pendant

Beam Projects





Beam boomma

4pcs of beam in installation of 25pcs of Pyrite in patina gold





Beam boomma 4pcs of beam in installation of 25pcs of Lens in beige and dark green colour





Beam boomma 6pcs of beam in anthracite colour

Beam Options

Options

Pendant

Fitting options
brushed gold
brushed silver
brushed bronze
anthracite



Beam boomma

Brushed gold

Brushed silver

Brushed bronze

Anthracite

Beam

Technical Information

Technical sheet

LIGHTING DESCRIPTION	
Size	dia. 18 mm, H 140 mm dia. 0,7 inch, H 5,5 inch
Cable	transparent 2,5 - 15 m (max) / 98,4 - 590,5 inch (max) per specific project
Weight	0,2 kg / 0,44 lb
Material	aluminum
Mounting	brushed gold brushed silver brushed bronze anthracite
Protection	IP 20
Nominal voltage	12 - 24 V / DC
Class	III. EU / II. USA

LIGHT SOURCE	
Type	LED module 3,8 W
Base	custom Cree LED module
Brightness	214 lm
Maximum intensity	616 Lux / 1 m, 150 Lux / 2 m
Temperature CCT	2582 K
Color index	Ra 93,2 (R9 - 61, R13 - 94)
Beam angle	32°
UGR	<10
Dimming	Dimmable with DALI, CASSAMBI or non-dimmable

Handmade glass attributes

BOMMA has expanded its portfolio with Beam, a technical light fixture designed to complement the BOMMA Constellations range. Featuring a conical light beam with a 32° emission angle, it offers versatile illumination, seamlessly adapting to both intimate private settings and focused workspaces.

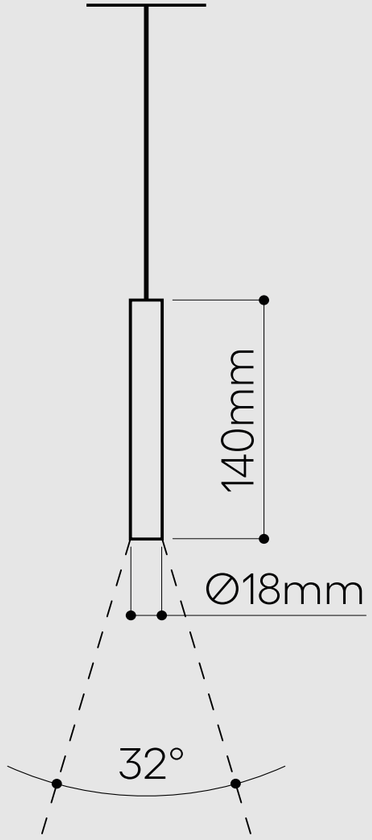

CRI values Ra 93,2

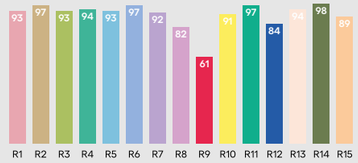

TM30 VECTOR

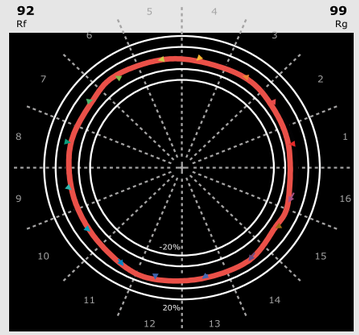

Color Properties

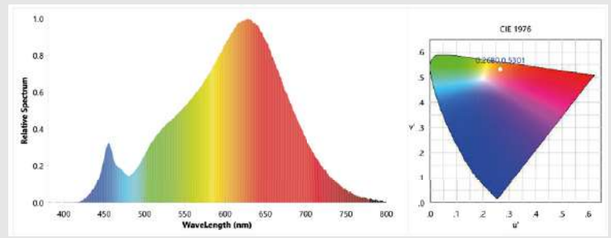

UGR

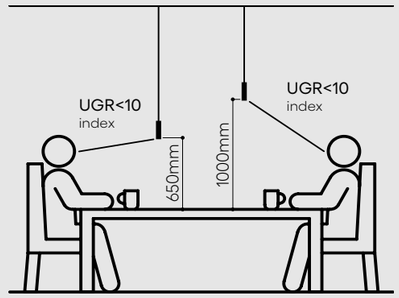

step beyond

BOMMA BMRC Group s.r.o. Pod dráhou 1638/7 Prague 7, 170 00 Czech Republic info@bomma.cz