Phenomena bomma







Phenomena boomma



Phenomena loomma

Phenomena Inspiration

Transient images of the eternal

The collection was inspired by simple shapes: a circle, a triangle, a rectangle and an oval. The term phenomenon comes from the Greek word for “appearance”. The forms are what you see on first sight. In Plato’s idealist philosophy, phenomena are transient, likenesses of the eternal, perfect Forms and so are not truly real. This seems very fitting for a collection made in a material that is so difficult yet versatile, so strong yet fragile as glass.

Design by Dechem Studio

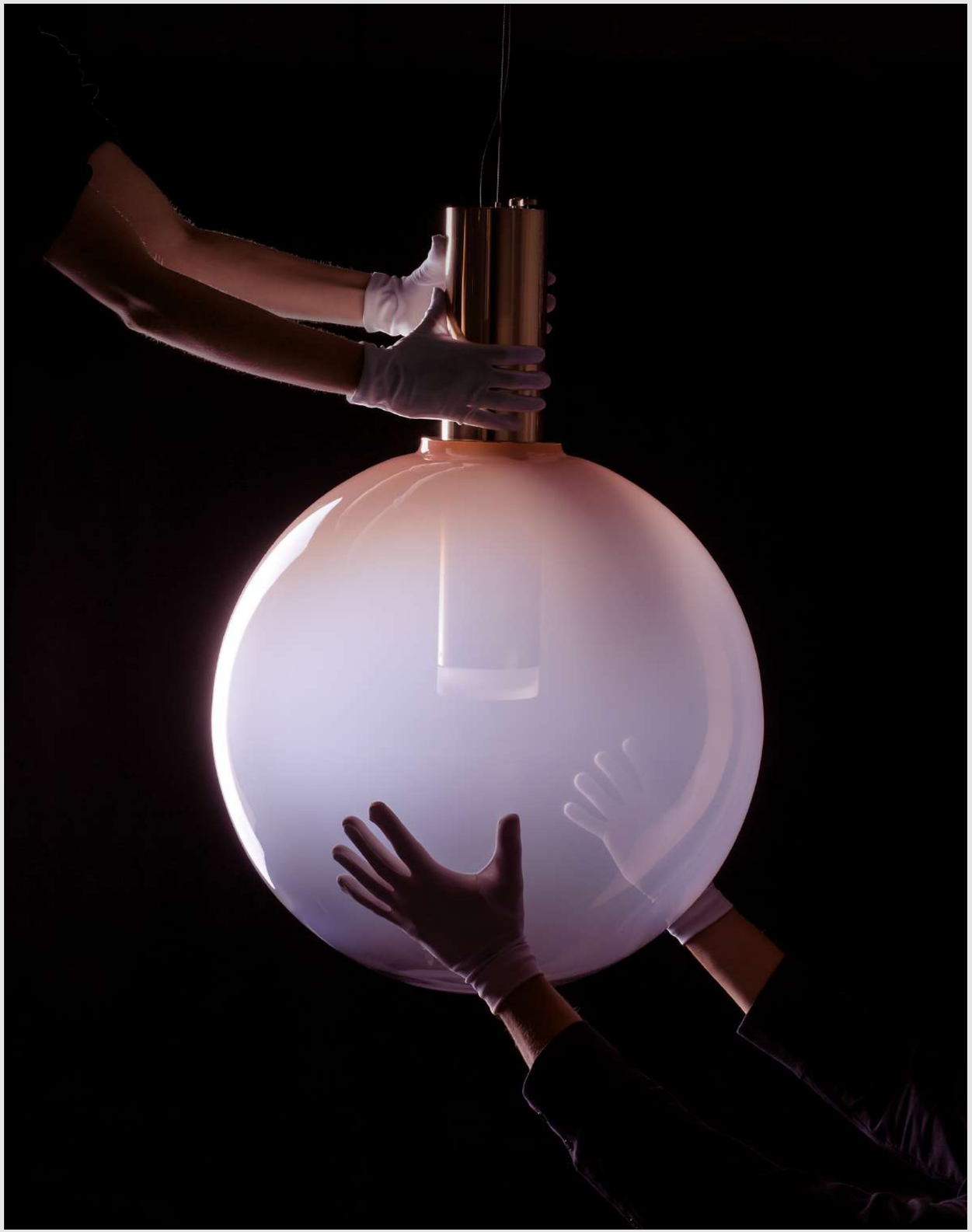

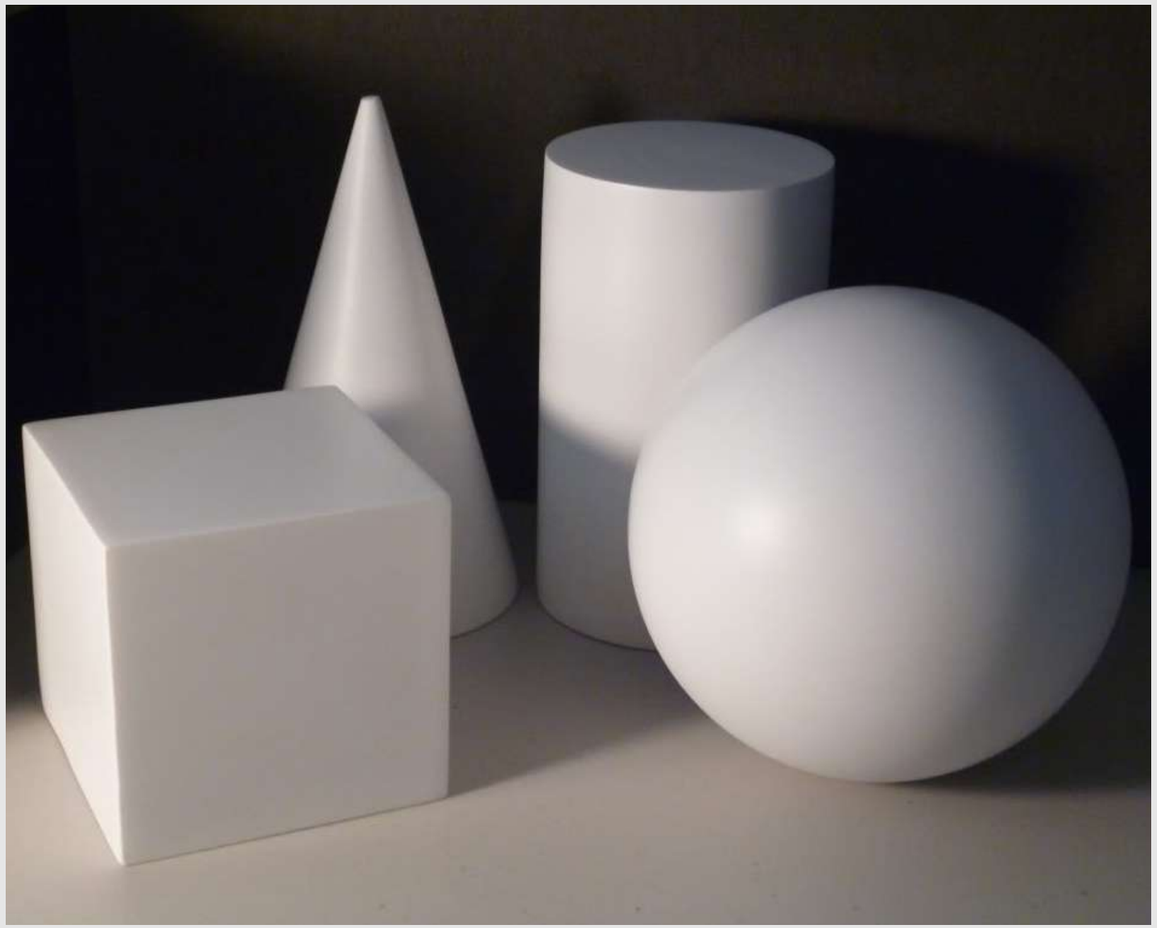

Phenomena boomma

Phenomena Production



Phenomena boomma



Phenomena bomma



Phenomena Projects





Phenomena boomma E19 Apartment, Czechia Euroluce 2025







Phenomena boomma

Penthouse Nero, Miami, Interior by Select Interior Design – Danilo Calmon

Šárecký dvůr, Czechia





Phenomena boomma Park Tower West, Dominican Republic, 2020 Espacio Home Design, Mallorca, 2020





Phenomena boomma

Family Home, Brooklyn USA

Apartment in pastel tones, Czech republic, Interior by Malfinio





Phenomena boomma ton





Phenomena bomma DEPO showroom, Prague, 2021 BOMMA Atelier, Prague, 2021





Phenomena boomma Light & Building 2024 LEMARKET Highlights, 2020



Phenomena boomma

Space concept by Monument office

Phenomena Options

Options

Pendant

Glass options
flamingo pink
mint green
ferrari red
smoke grey
clear

Fitting options
silver
gold
brushed gold
brushed silver



Phenomena bomma

Flamingo pink / Gold

Mint green / Silver

Ferrari red / Gold

Smoke grey / Silver

Options

Pendant Clear

Glass options
flamingo pink
mint green
ferrari red
smoke grey
clear

Fitting options
silver
gold
brushed gold
brushed silver



Clear / Brushed gold

Clear / Brushed silver

Clear / Brushed gold

Clear / Brushed silver

Options

Floor

Glass options
flamingo pink
mint green
smoke
clear

Fitting options
brushed gold
brushed silver



Phenomena boomma

Flamingo pink / Brushed gold

Mint green / Brushed silver

Smoke / Brushed silver

Clear / Brushed gold

Phenomena

Technical Information

PHENOMENA
pendant large sphere

Design by
Dechem Studio

Handmade glass attributes

All Bomma products are hand-made from mouth-blown lead-free crystal. Therefore any small bubbles, non-melts and irregularities in the glass are both proof and a characteristic feature of this traditional craft.

The Phenomena Collection is made by underlying colored glass technology. Thanks to the manual process of blowing underlay glass, each piece is an original. Individual products may vary slightly in intensity, hue or even color. This is an accompanying characteristic of the traditional underlay glass technology.

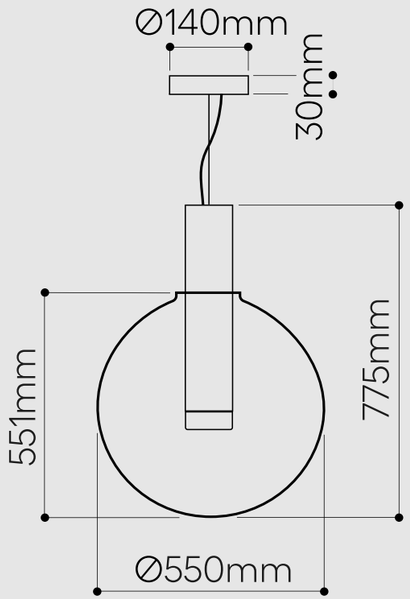

Phenomena bomma

LIGHTING DESCRIPTION

Size	dia. 550 mm, H 775 mm dia. 21,6 inch, H 30,5 inch
Cable	black textile braid 2,5 m / 98,4 inch
Weight	+- 22,5 kg / 49,5 lb
Glass	mouth-blow lead-free crystal in clear, smoke grey and flamingo pink
Mounting	silver (polished stainless steel) brushed silver (brushed stainless steel) gold (polished stainless steel with nitride titan coating) brushed gold (brushed stainless steel with nitride titan coating)
Protection	IP 20
Nominal voltage	180-260 V AC, 50 / 60 Hz (EU) 110-120 V AC, 60 Hz (USA)
Class	I. EU / I. USA

LIGHT SOURCE

Type	PAR30, 20W led, 1600 lm (EU) A60 / A19, 6W led, 600 lm (USA)
Base	E27 (EU) / E26 (USA)
Wattage	max. 20W (EU) / max. 13W (USA)
Temperature	3000 K (EU) / 2700 K (USA)
Color index	RA 90+
Dimming	Dimmable with TRIAC ; on demand dimmable with DALI, RF/WIFI, for information on dimming with other systems please contact your Bomma partner.

PACKAGING

Material	Cardboard
Size	780 × 660 × 660 mm 30,7 × 26 × 26 inch

Origin: traditionally produced in the Czech Republic
Intellectual property license holder: Bomma Czech Republic (EU)
represented by BMRC group s.r.o.

CERTIFICATES

PHENOMENA
pendant small sphere

Design by
Dechem Studio

Handmade glass attributes

All Bomma products are hand-made from mouth-blown lead-free crystal. Therefore any small bubbles, non-melts and irregularities in the glass are both proof and a characteristic feature of this traditional craft.

The Phenomena Collection is made by underlying colored glass technology. Thanks to the manual process of blowing underlay glass, each piece is an original. Individual products may vary slightly in intensity, hue or even color. This is an accompanying characteristic of the traditional underlay glass technology.

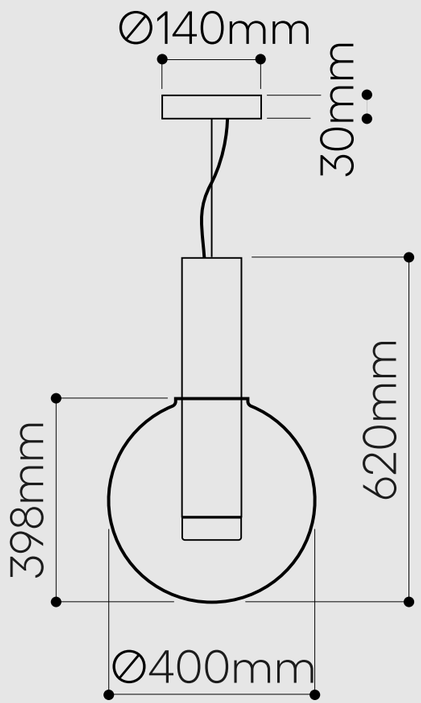

Phenomena bomma

LIGHTING DESCRIPTION

Size	dia. 400 mm, H 620 mm dia. 15,7 inch, H 24,4 inch
Cable	black textile braid 2,5 m / 98,4 inch
Weight	+- 15 kg / 33 lb
Glass	mouth-blow lead-free crystal in clear, smoke grey and ferrari red
Mounting	silver (polished stainless steel) brushed silver (brushed stainless steel) gold (polished stainless steel with nitride titan coating) brushed gold (brushed stainless steel with nitride titan coating)
Protection	IP 20
Nominal voltage	180-260 V AC, 50 / 60 Hz (EU) 110-120 V AC, 60 Hz (USA)
Class	I. EU / I. USA

LIGHT SOURCE

Type	PAR30, 20W led, 1600 lm (EU) A60 / A19, 6W led, 600 lm (USA)
Base	E27 (EU) / E26 (USA)
Wattage	max. 20W (EU) / max. 13W (USA)
Temperature	3000 K (EU) / 2700 K (USA)
Color index	RA 90+
Dimming	Dimmable with TRIAC ; on demand dimmable with DALI, RF/WIFI, for information on dimming with other systems please contact your Bomma partner.

PACKAGING

Material	Cardboard
Size	780 × 660 × 660 mm 30,7 × 26 × 26 inch

Origin: traditionally produced in the Czech Republic
Intellectual property license holder: Bomma Czech Republic (EU)
Represented by BMRC group s.r.o

CERTIFICATES

PHENOMENA
pendant cone

Design by
Dechem Studio

Handmade glass attributes

All Bomma products are hand-made from mouth-blown lead-free crystal. Therefore any small bubbles, non-melts and irregularities in the glass are both proof and a characteristic feature of this traditional craft.

The Phenomena Collection is made by underlying colored glass technology. Thanks to the manual process of blowing underlay glass, each piece is an original. Individual products may vary slightly in intensity, hue or even color. This is an accompanying characteristic of the traditional underlay glass technology.

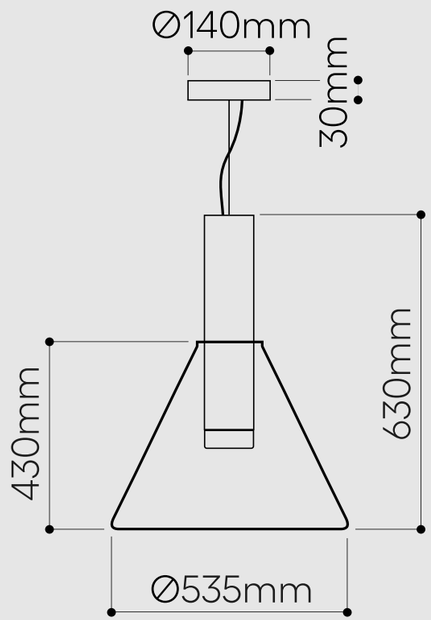

Phenomena bomma

LIGHTING DESCRIPTION

Size	dia. 535 mm, H 630 mm dia. 21 inch, H 24,8 inch
Cable	black textile braid 2,5 m / 98,4 inch
Weight	+- 24 kg / 52,8 lb
Glass	mouth-blow lead-free crystal in clear and smoke grey
Mounting	silver (polished stainless steel) brushed silver (brushed stainless steel) gold (polished stainless steel with nitride titan coating) brushed gold (brushed stainless steel with nitride titan coating)
Protection	IP 20
Nominal voltage	180-260 V AC, 50 / 60 Hz (EU) 110-120 V AC, 60 Hz (USA)
Class	I. EU / I. USA

LIGHT SOURCE

Type	PAR30, 20W led, 1600 lm (EU) A60 / A19, 6W led, 600 lm (USA)
Base	E27 (EU) / E26 (USA)
Wattage	max. 20W (EU) / max. 13W (USA)
Temperature	3000 K (EU) / 2700 K (USA)
Color index	RA 90+
Dimming	Dimmable with TRIAC ; on demand dimmable with DALI, RF/WIFI, for information on dimming with other systems please contact your Bomma partner.

PACKAGING

Material	Cardboard
Size	780 × 660 × 660 mm 30,7 × 26 × 26 inch

Origin: traditionally produced in the Czech Republic
Intellectual property license holder: Bomma Czech Republic (EU)
represented by BMRC group s.r.o.

CERTIFICATES

PHENOMENA
pendant capsule

Design by
Dechem Studio

Handmade glass attributes

All Bomma products are hand-made from mouth-blown lead-free crystal. Therefore any small bubbles, non-melts and irregularities in the glass are both proof and a characteristic feature of this traditional craft.

The Phenomena Collection is made by underlying colored glass technology. Thanks to the manual process of blowing underlay glass, each piece is an original. Individual products may vary slightly in intensity, hue or even color. This is an accompanying characteristic of the traditional underlay glass technology.

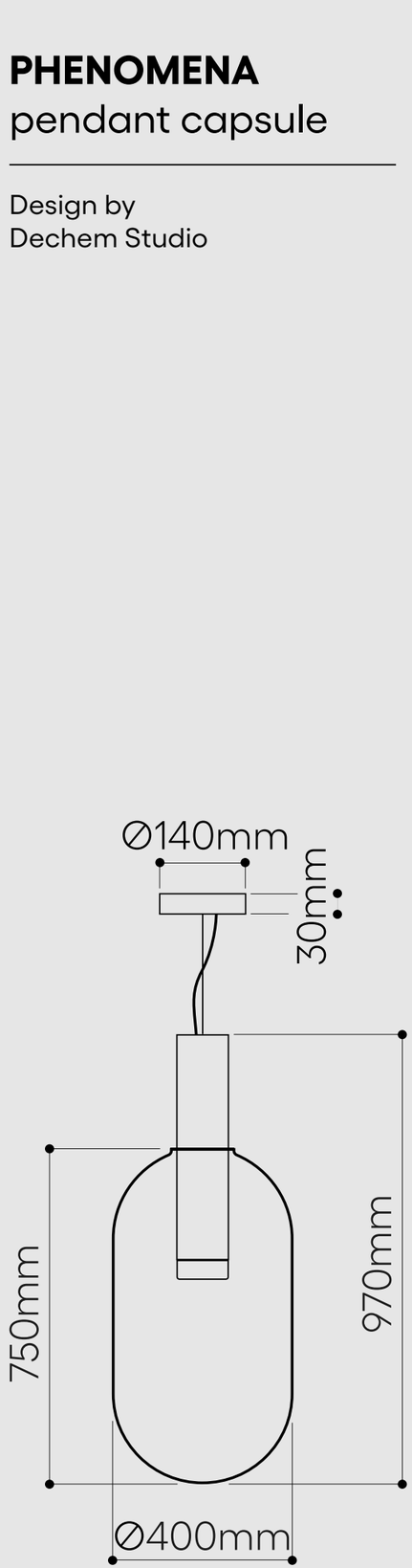

Phenomena bomma

LIGHTING DESCRIPTION

Size	dia. 400 mm, H 970 mm dia. 15,7 inch, H 38,2 inch
Cable	black textile braid 2,5 m / 98,4 inch
Weight	+- 23 kg / 50,6 lb
Glass	mouth-blow lead-free crystal in clear, smoke grey and mint green
Mounting	silver (polished stainless steel) brushed silver (brushed stainless steel) gold (polished stainless steel with nitride titan coating) brushed gold (brushed stainless steel with nitride titan coating)
Protection	IP 20
Nominal voltage	180-260 V AC, 50 / 60 Hz (EU) 110-120 V AC, 60 Hz (USA)
Class	I. EU / I. USA

LIGHT SOURCE

Type	PAR30, 20W led, 1600 lm (EU) A60 / A19, 6W led, 600 lm (USA)
Base	E27 (EU) / E26 (USA)
Wattage	max. 20W (EU) / max. 13W (USA)
Temperature	3000 K (EU) / 2700 K (USA)
Color index	RA 90+
Dimming	Dimmable with TRIAC ; on demand dimmable with DALI, RF/WIFI, for information on dimming with other systems please contact your Bomma partner.

PACKAGING

Material	Cardboard
Size	900 × 640 × 640 mm 35,4 × 25,2 × 25,2 inch

Origin: traditionally produced in the Czech Republic
Intellectual property license holder: Bomma Czech Republic (EU)
represented by BMRC group s.r.o.

CERTIFICATES

PHENOMENA
floor lamp large sphere

Design by
Dechem Studio

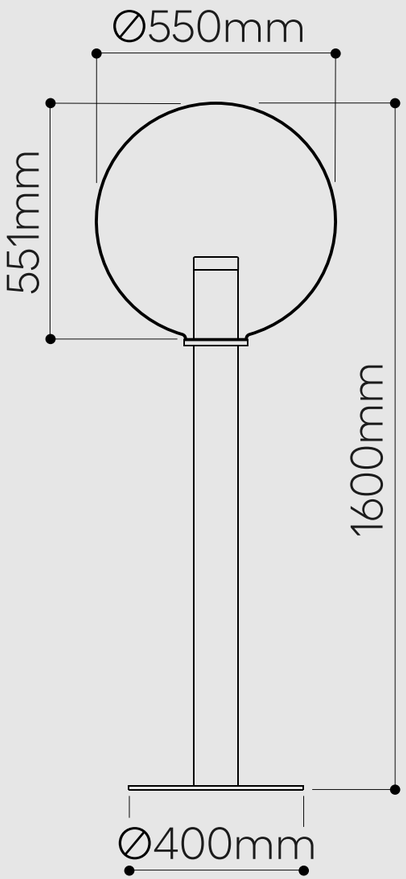

Phenomena bomma

Handmade glass attributes

All Bomma products are hand-made from mouth-blown lead-free crystal. Therefore any small bubbles, non-melts and irregularities in the glass are both proof and a characteristic feature of this traditional craft.

The Phenomena Collection is made by underlying colored glass technology. Thanks to the manual process of blowing underlay glass, each piece is an original. Individual products may vary slightly in intensity, hue or even color. This is an accompanying characteristic of the traditional underlay glass technology.

LIGHTING DESCRIPTION

Size	dia. 550 mm, H 1600 mm dia. 21,6 inch, H 63 inch
Cable	black textile braid 1,8 m / 70,8 inch
Weight	+- 38 kg / 84 lb
Glass	mouth-blow lead-free crystal in clear, smoke grey and flamingo pink
Mounting	silver (polished stainless steel) brushed silver (brushed stainless steel) gold (polished stainless steel with nitride titan coating) brushed gold (brushed stainless steel with nitride titan coating)
Protection	IP 20
Nominal voltage	220-240V / A.C. 50 hz (EU) 110-120 V / A.C. 60 Hz (USA)
Class	II. EU / I. USA

LIGHT SOURCE

Type	A60 / A19, 8W led, 800 lm (EU) A60 / A19, 6W led, 600 lm (USA)
Base	E27 (EU) / E26 (USA)
Wattage	max. 13W
Temperature	2700 K
Color index	RA 90+
Dimming	Dimmable with TRIAC ; on demand dimmable with DALI, RF/WIFI, for information on dimming with other systems please contact your Bomma partner.

PACKAGING

Material	Cardboard
Size	780 × 660 × 660 mm 30,7 × 26 × 26 inch 1260 × 430 × 440 mm 49,6 × 16,9 × 17,3 inch

Origin: traditionally produced in the Czech Republic
Intellectual property license holder: Bomma Czech Republic (EU)
Represented by BMRC group s.r.o.

CERTIFICATES

PHENOMENA
floor lamp capsule

Design by
Dechem Studio

Handmade glass attributes

All Bomma products are hand-made from mouth-blown lead-free crystal. Therefore any small bubbles, non-melts and irregularities in the glass are both proof and a characteristic feature of this traditional craft.

The Phenomena Collection is made by underlying colored glass technology. Thanks to the manual process of blowing underlay glass, each piece is an original. Individual products may vary slightly in intensity, hue or even color. This is an accompanying characteristic of the traditional underlay glass technology.

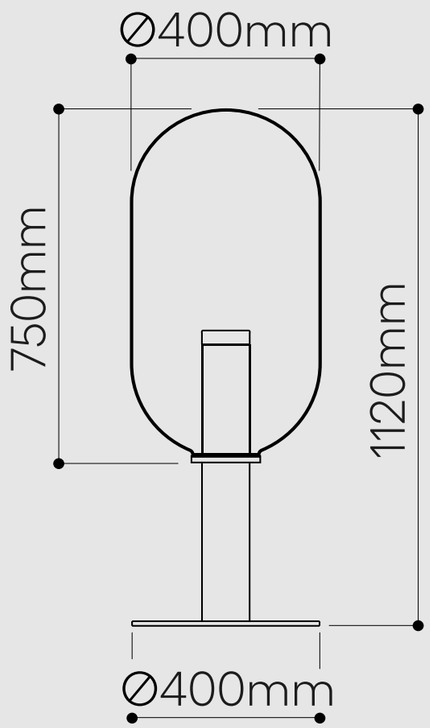

Phenomena bomma

LIGHTING DESCRIPTION

Size	dia. 400 mm, H 1120 mm dia. 15,7 inch, H 44,1 inch
Cable	black textile braid 1,8 m / 70,8 inch
Weight	+- 35 kg / 77 lb
Glass	mouth-blow lead-free crystal in clear, smoke grey and mint green
Mounting	silver (polished stainless steel) brushed silver (brushed stainless steel) gold (polished stainless steel with nitride titan coating) brushed gold (brushed stainless steel with nitride titan coating)
Protection	IP 20
Nominal voltage	220-240V / A.C. 50 hz (EU) 110-120 V / A.C. 60 Hz (USA)
Class	II. EU / I. USA

LIGHT SOURCE

Type	A60 / A19, 8W led, 800 lm (EU) A60 / A19, 6W led, 600 lm (USA)
Base	E27 (EU) / E26 (USA)
Wattage	max. 13W
Temperature	2700 K
Color index	RA 90+
Dimming	Dimmable with TRIAC ; on demand dimmable with DALI, RF/WIFI, for information on dimming with other systems please contact your Bomma partner.

PACKAGING

Material	Cardboard
Size	900 × 640 × 640 mm 35,4 × 25,2 × 25,2 inch 660 × 430 × 440 mm 25,9 × 16,9 × 16,9 inch

Origin: traditionally produced in the Czech Republic
Intellectual property license holder: Bomma Czech Republic (EU)
Represented by BMRC group s.r.o.

CERTIFICATES

step beyond

BOMMA BMRC Group s.r.o. Pod dráhou 1638/7 Prague 7, 170 00 Czech Republic info@bomma.cz