

Orbital bomma









Orbital boomma

Orbital Inspiration

Crossing galactic paths.

Orbital paths of multicolored celestial bodies with hypnotically glowing cores. This ingenious design of hand-blown glass lenses, held together by a metal mounting, creates a fascinating visual experience from different angles.

Design by Studio deFORM

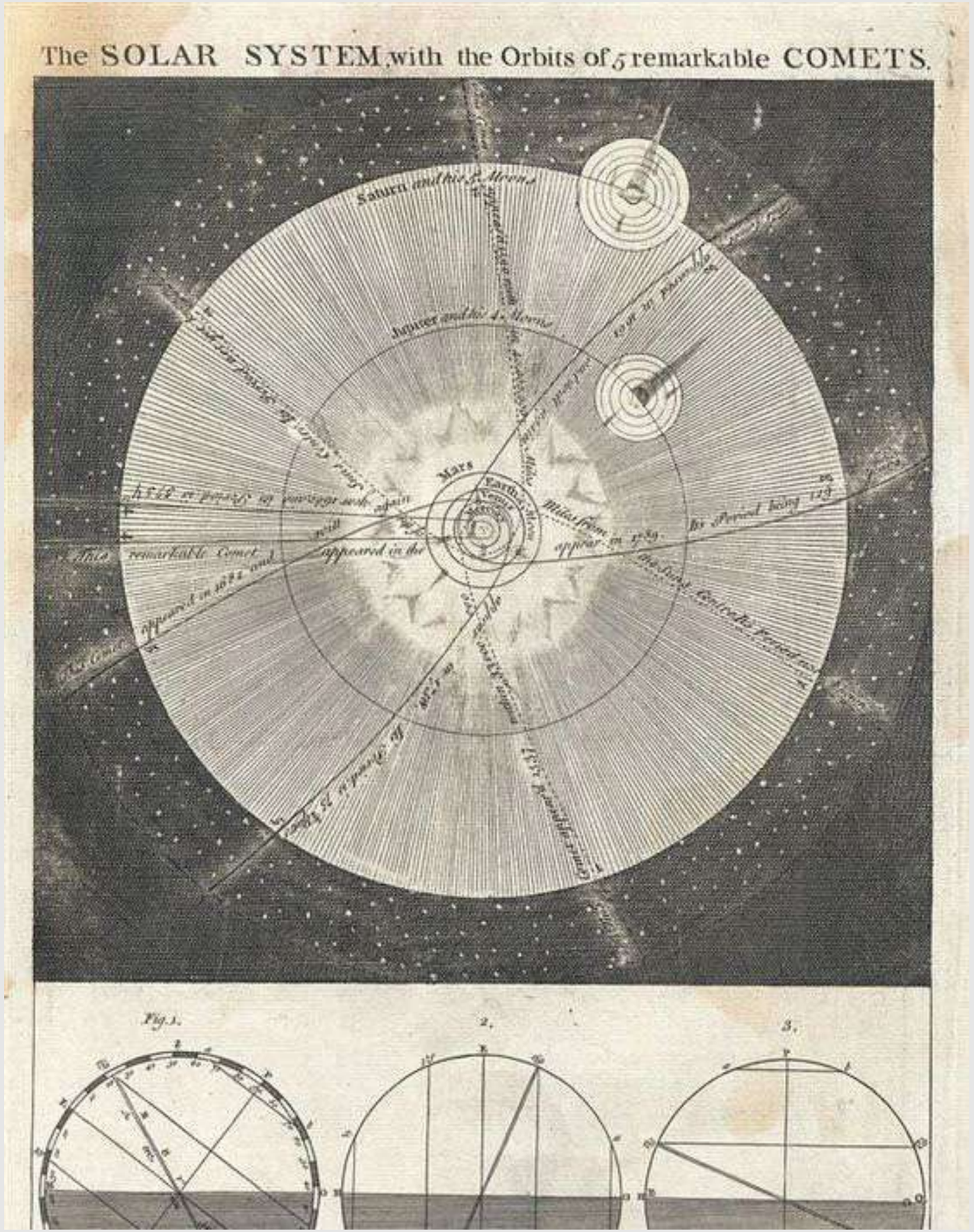



Orbital boomma

Orbital Production









Orbital Projects





Orbital boomma Kabelovna Studios, 2022





Orbital boomma Euroluce 2025 Maison&Objet, Paris 2026

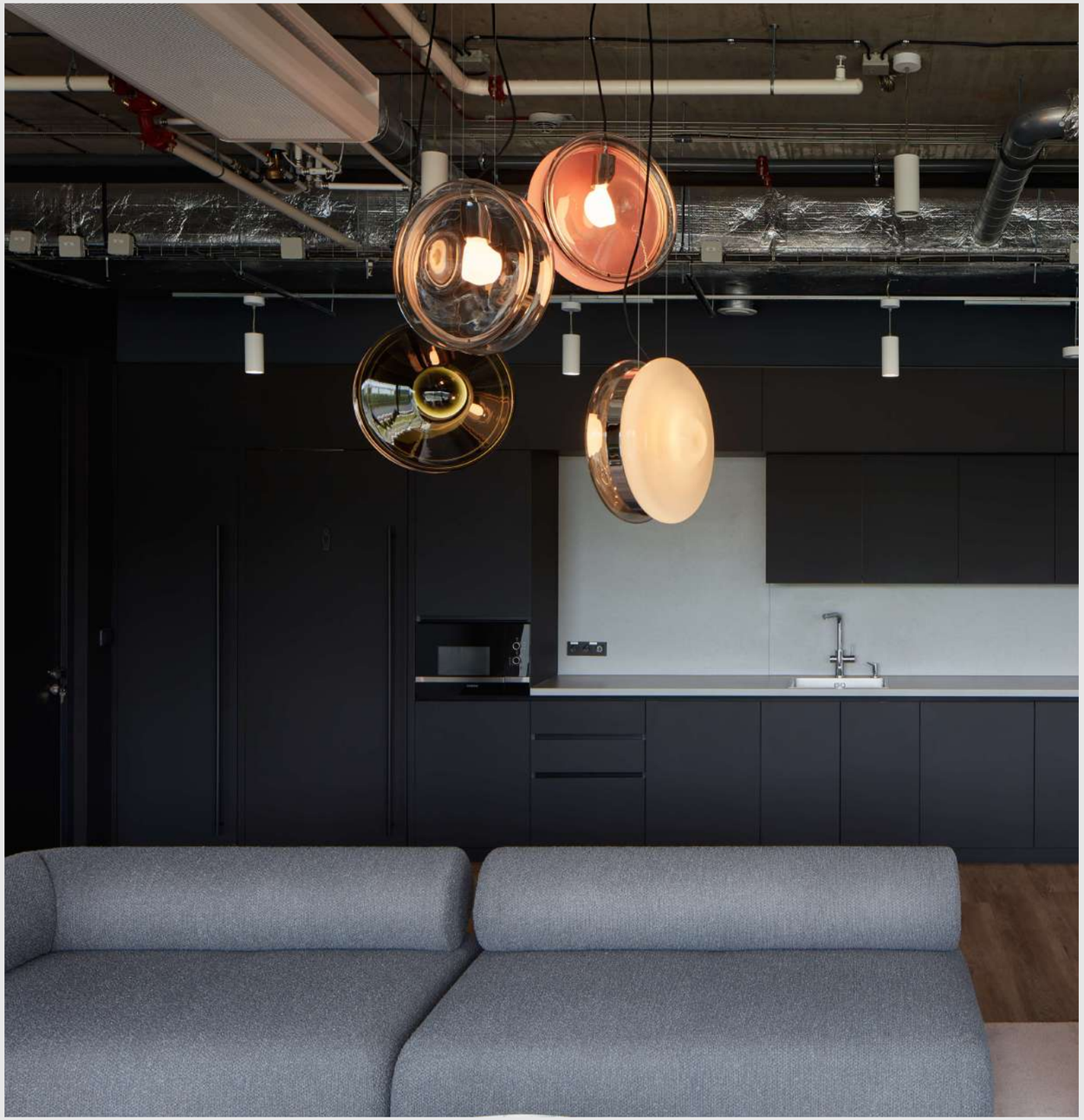



Orbital bomma

New Headquarters of Bomma, Prague, Interior by Studio Perspektiv





Orbital boomma Light+Building stand, Frankfurt, 2024





Orbital bomma

Masaryčka, Czechia

Salone del Mobile 2019, Milan, Italy



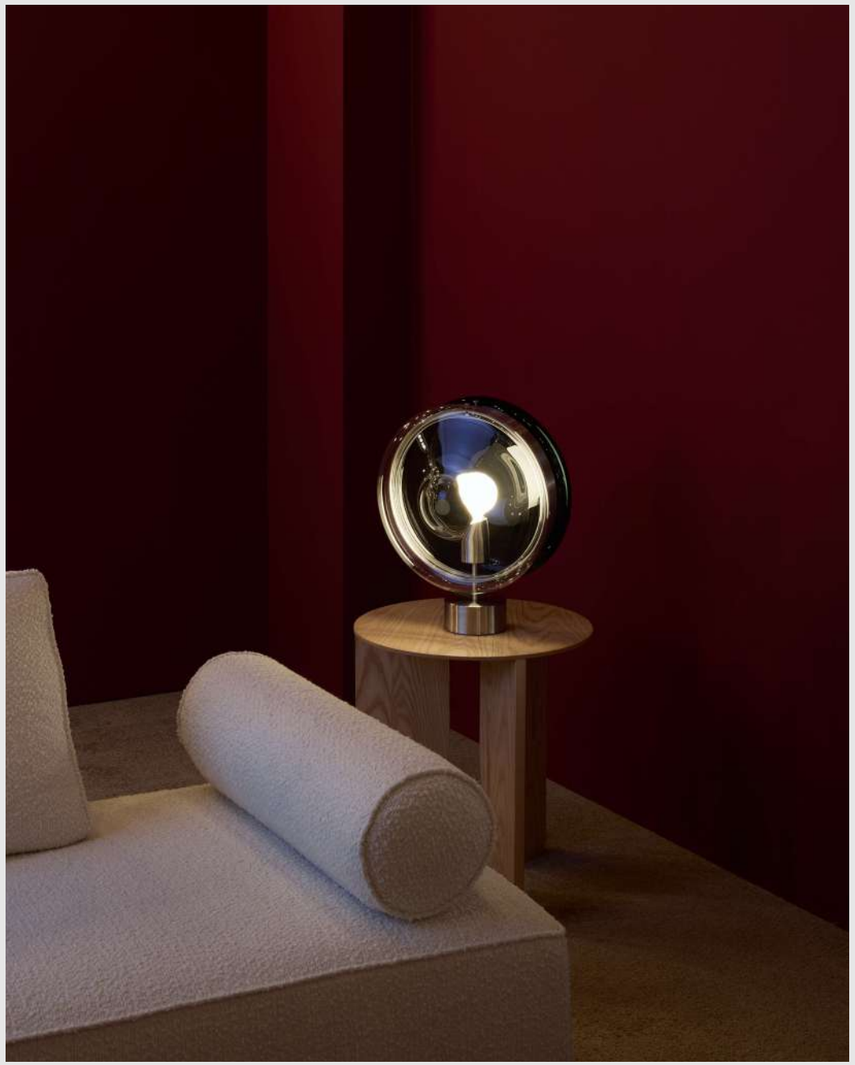

Orbital boomma Minotti Euroluce 2025

Orbital Options

Options

Pendant

Glass options
venus pink
smoke
polaris white
moon clear

Fitting options
brushed gold
brushed silver



Orbital bomma

Venus pink / Brushed silver

Smoke / Brushed gold

Polaris white / Brushed silver

Moon clear / Brushed gold

Options

Wall

Glass options
venus pink
smoke
polaris white
moon clear

Fitting options
brushed gold
brushed silver



Venus pink / Brushed silver

Smoke / Brushed gold

Polaris white / Brushed silver

Moon clear / Brushed gold

Options

Table

Glass options
venus pink
smoke
polaris white
moon clear

Fitting options
brushed gold
brushed silver



Venus pink / Brushed silver

Smoke / Brushed gold

Polaris white / Brushed silver

Moon clear / Brushed gold

Options

Floor

Glass options
venus pink
smoke
polaris white

Fitting options
brushed gold
brushed silver



Smoke / Venus pink / Brushed silver



Smoke / Polaris white / Brushed gold



Venus pink / Polaris white / Brushed silver

Orbital Technical Information

ORBITAL pendant

Design by
Studio deFORM

Handmade glass attributes

All Bomma products are hand-made from mouth-blown lead-free crystal. Therefore any small bubbles, non-melts and irregularities in the glass are both proof and a characteristic feature of this traditional craft.

The Orbital Collection is made by underlying colored glass technology. Thanks to the manual process of blowing underlay glass, each piece is an original. Individual products may vary slightly in intensity, hue or even color. This is an accompanying characteristic of the traditional underlay glass technology.

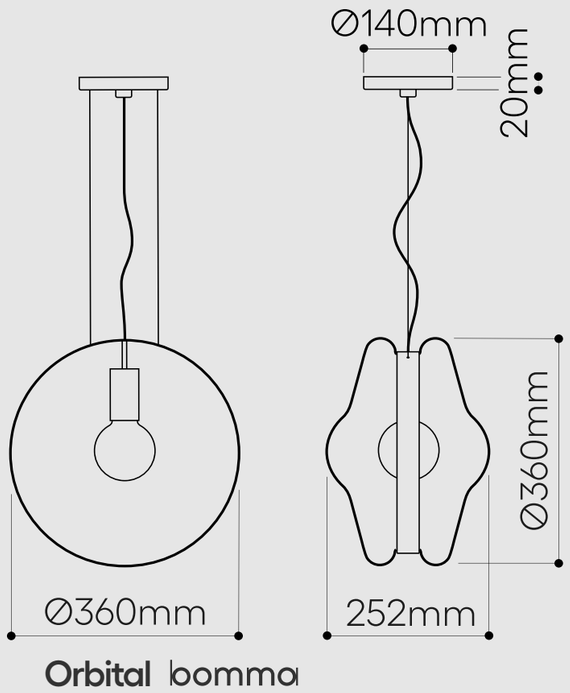

LIGHTING DESCRIPTION

Size	360 × 252 × 360 mm 14,2 × 9,9 × 14,2 inch
Cable	black textile braid 2,5 m / 98,4 inch
Weight	+-9 kg / 19,8 lb
Glass	mouth-blown lead-free crystal with in Moon clear, Venus pink, Polaris white, Mercury black
Mounting	silver (polished stainless steel) patina gold (brushed stainless steel with nitride titan coating)
Protection	IP 20
Nominal voltage	220-240V / A.C. 50 hz (EU) 110-120 V / A.C. 60 Hz (USA)
Class	II. EU / I. USA

LIGHT SOURCE

Type	G80, 6W LED, 510 lm
Base	E27 EU / E26 USA
Wattage	max. 13W
Temperature	2700 K
Color index	RA 90+
Dimming	Dimmable with TRIAC ; on demand dimmable with DALI, RF/WIFI, for information on dimming with other systems please contact your Bomma partner.

PACKAGING

Material	Cardboard
Size	510 × 430 × 430 mm 20,1 × 16,9 × 16,9 inch

Origin: traditionally produced in the Czech Republic
Intellectual property license holder: Bomma Czech Republic (EU)
Represented by BMRC group s.r.o.

CERTIFICATES

ORBITAL
wall & ceiling lighting

Design by
Studio deFORM

Handmade glass attributes

All Bomma products are hand-made from mouth-blown lead-free crystal. Therefore any small bubbles, non-melts and irregularities in the glass are both proof and a characteristic feature of this traditional craft.

The Orbital Collection is made by underlying colored glass technology. Thanks to the manual process of blowing underlay glass, each piece is an original. Individual products may vary slightly in intensity, hue or even color. This is an accompanying characteristic of the traditional underlay glass technology.

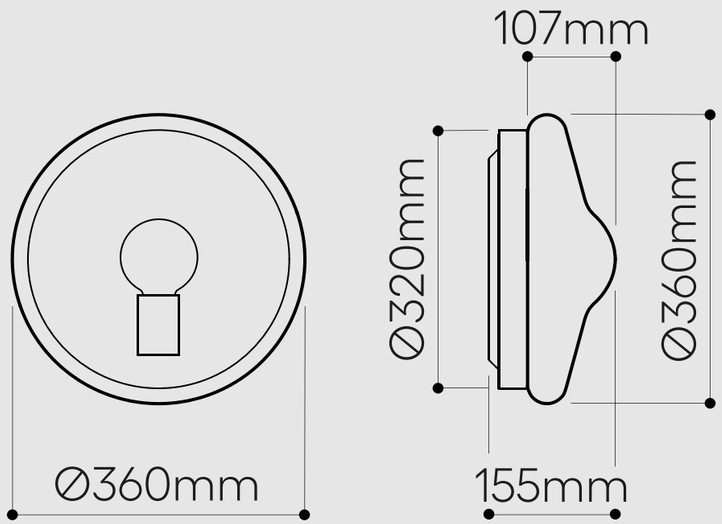

LIGHTING DESCRIPTION

Size	360 × 155× 360 mm 14,2 × 6,1 × 14,2 inch
Weight	+- 6,8 kg / 15 lb
Glass	mouth-blown lead-free crystal with in Moon clear, Venus pink, Polaris white, Mercury black
Mounting	silver (polished stainless steel) patina gold (brushed stainless steel with nitride titan coating)
Protection	IP 20
Nominal voltage	220-240V / A.C. 50 hz (EU) 110-120 V / A.C. 60 Hz (USA)
Class	II. EU / I. USA

LIGHT SOURCE

Type	G80, 6W LED, 510 lm
Base	E27 EU / E26 USA
Wattage	max. 13W
Temperature	2700 K
Color index	RA 90+
Dimming	Dimmable with TRIAC ; on demand dimmable with DALI, RF/WIFI, for information on dimming with other systems please contact your Bomma partner.

PACKAGING

Material	Cardboard
Size	510 × 430 × 430 mm 20,1 × 16,9 × 16,9 inch

Origin: traditionally produced in the Czech Republic
Intellectual property license holder: Bomma Czech Republic (EU)
Represented by BMRC group s.r.o.

CERTIFICATES

ORBITAL table lamp

Design by
Studio deFORM

Handmade glass attributes

All Bomma products are hand-made from mouth-blown lead-free crystal. Therefore any small bubbles, non-melts and irregularities in the glass are both proof and a characteristic feature of this traditional craft.

The Orbital Collection is made by underlying colored glass technology. Thanks to the manual process of blowing underlay glass, each piece is an original. Individual products may vary slightly in intensity, hue or even color. This is an accompanying characteristic of the traditional underlay glass technology.

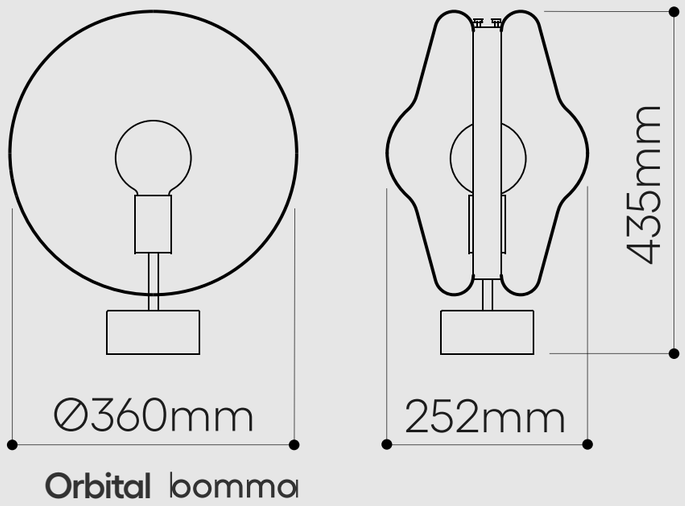

LIGHTING DESCRIPTION

Size	360 × 435 × 252 mm 14,2 × 17,1 × 9,9 inch
Cable	black textile braid 1,8 m / 70,9 inch
Weight	+- 12 kg / 26,4 lb
Glass	mouth-blown lead-free crystal with in Moon clear, Venus pink, Polaris white, Mercury black
Mounting	silver (polished stainless steel) patina gold (brushed stainless steel with nitride titan coating)
Protection	IP 20
Nominal voltage	220-240V / A.C. 50 hz (EU) 110-120 V / A.C. 60 Hz (USA)
Class	II. EU / I. USA

LIGHT SOURCE

Type	G80, 6W LED, 510 lm
Base	E27 EU / E26 USA
Wattage	max. 13W
Temperature	2700 K
Color index	RA 90+
Dimming	Dimmable with TRIAC ; on demand dimmable with DALI, RF/WIFI, for information on dimming with other systems please contact your Bomma partner. Dimmer within the power cable.

PACKAGING

Material	Cardboard
Size	510 × 430 × 430 mm 20,1 × 16,9 × 16,9 inch

Origin: traditionally produced in the Czech Republic
Intellectual property license holder: Bomma Czech Republic (EU)
Represented by BMRC group s.r.o.

CERTIFICATES

ORBITAL floor lamp

Design by
Studio deFORM

Handmade glass attributes

All Bomma products are hand-made from mouth-blown lead-free crystal. Therefore any small bubbles, non-melts and irregularities in the glass are both proof and a characteristic feature of this traditional craft.

The Orbital Collection is made by underlying colored glass technology. Thanks to the manual process of blowing underlay glass, each piece is an original. Individual products may vary slightly in intensity, hue or even color. This is an accompanying characteristic of the traditional underlay glass technology.

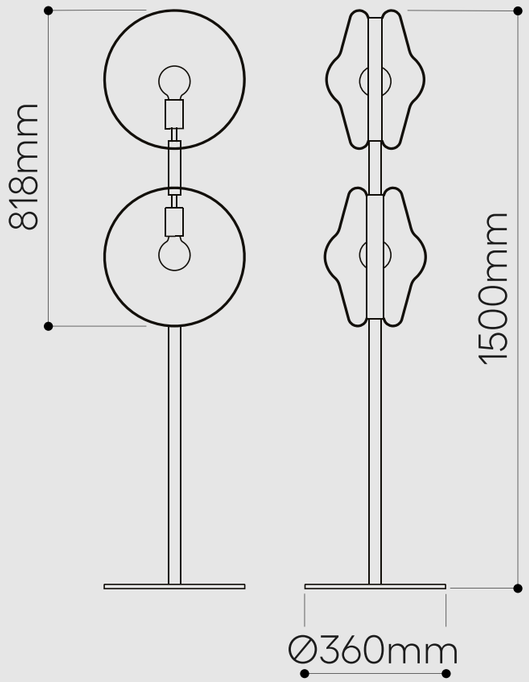

Orbital bomma

LIGHTING DESCRIPTION	
Size	360 × 1500 mm 14,2 × 59 inch
Cable	black, textile braid 1,8 m / 70,8 inch
Weight	+- 35 kg / 77 lb
Glass	mouth-blown lead-free crystal with in Moon clear, Venus pink, Polaris white, Mercury black
Mounting	patina gold (brushed stainless steel with nitride titan coating) black (stainless steel with black powder coating)
Protection	IP 20
Nominal voltage	220-240V / A.C. 50 hz (EU) 110-120 V / A.C. 60 Hz (USA)
Class	II. EU / I. USA

LIGHT SOURCE	
Type	G80, 6W LED, 510 lm
Base	E27 EU / E26 USA
Wattage	max. 13W
Temperature	2700 K
Color index	RA 90+
Dimming	Dimmable with TRIAC ; on demand dimmable with DALI, RF/WIFI, for information on dimming with other systems please contact your Bomma partner. Dimmer within the power cable.

PACKAGING	
Material	Cardboard
Size	510 × 430 × 430 mm 20,1 × 16,9 × 16,9 inch 1550 × 540 × 540 mm 61 × 21,3 × 21,3 inch

Origin: traditionally produced in the Czech Republic
Intellectual property license holder: Bomma Czech Republic (EU)
Represented by BMRC group s.r.o.

CERTIFICATES

step beyond

BOMMA BMRC Group s.r.o. Pod dráhou 1638/7 Prague 7, 170 00 Czech Republic info@bomma.cz