

Ollo bomma





Ollo boomma









Ollo Inspiration

An Infinite Universe in Glass

The Ollo collection, inspired by its distinctly circular shape, evokes balance, symmetry, and cyclical flow. At the heart of the design is a glass ring, within which a silent, captivating universe unfolds. Tiny bubbles, organically caught in the delicate swirls of cast clear glass, resemble stars –making each piece its own little cosmos.

Design by Václav Mlynář







Ollo bomma Václav Mlynář, **designer of the collection and BOMMA's Creative Director**

Ollo Production





Ollo boomma Crystal glass is poured into the mould and then pressed.



Ollo boomma

Each Ollo portable lamp has it‘s own unique structure of the glass





Ollo boomma

Each Ollo portable lamp has it‘s own unique structure of the glass

Ollo Projects



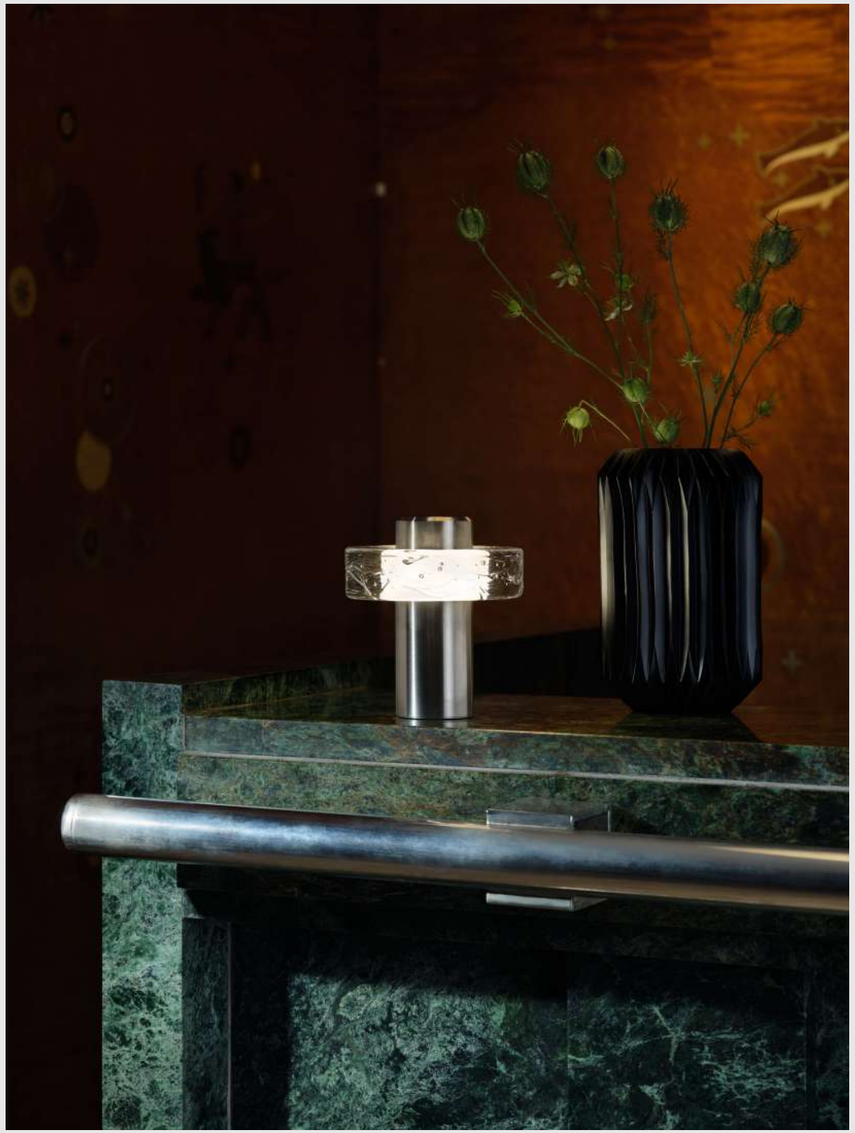





Ollo



Ollo boomma

Composition of 25 pcs of Ollo Pendant used.



Composition of 17 pcs of Ollo Pendant used.

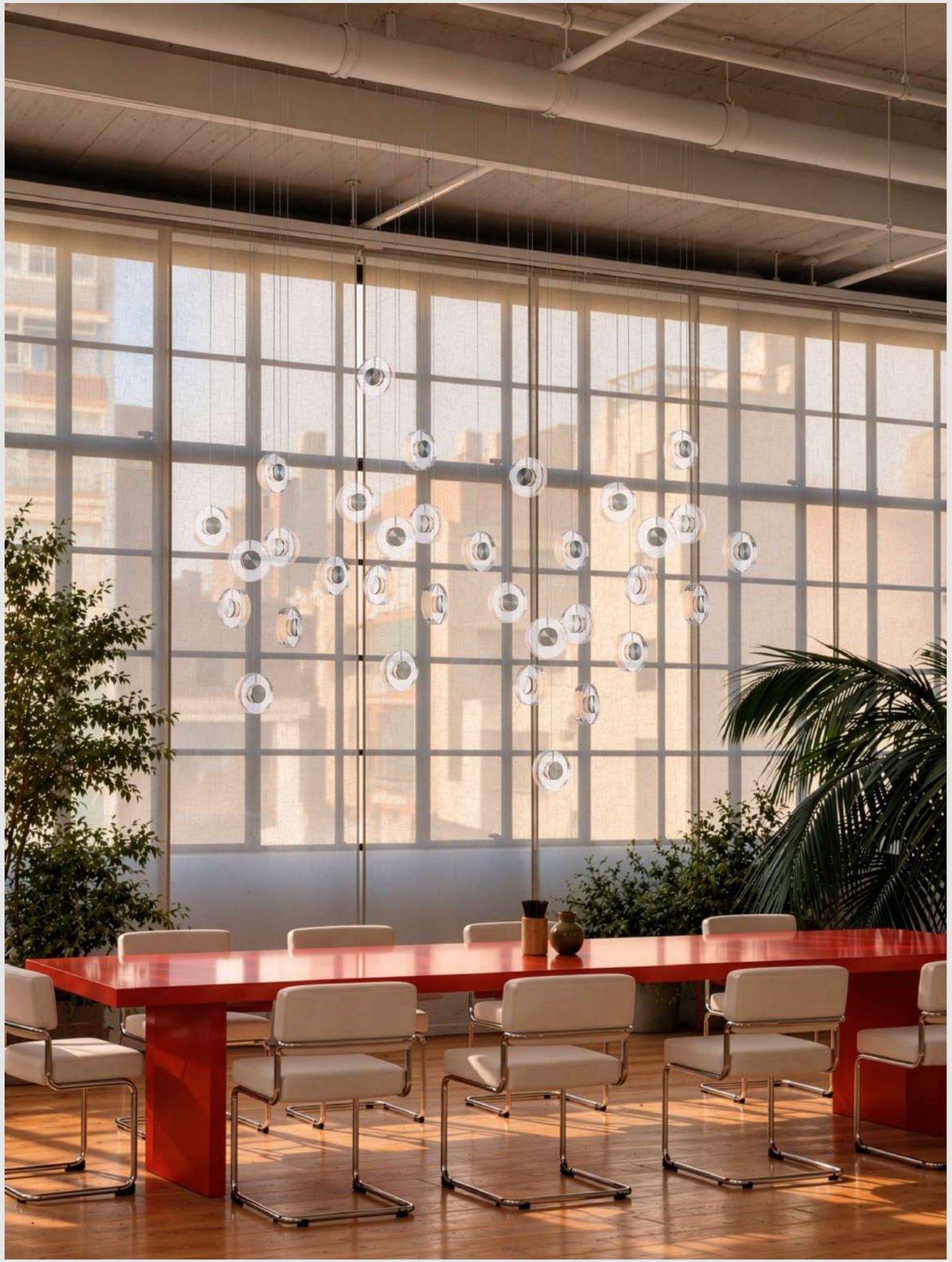

Ollo boomma

Composition of 33 pcs of Ollo Pendant used.



Composition of 12 pcs of Ollo Pendant used.



Ollo bomma

Ollo Options

Options

Portable Lamp

Glass options
clear

Fitting options
brushed bronze
brushed anthracite
brushed silver



clear / brushed bronze



clear / brushed anthracite



clear / brushed silver

Options

Pendant

Glass options
clear

Fitting options
brushed bronze
brushed gold
brushed silver



clear / brushed bronze

clear / brushed gold

clear / brushed silver

Options

Wall & Ceiling

Glass options
clear

Fitting options
brushed bronze
brushed gold
brushed silver

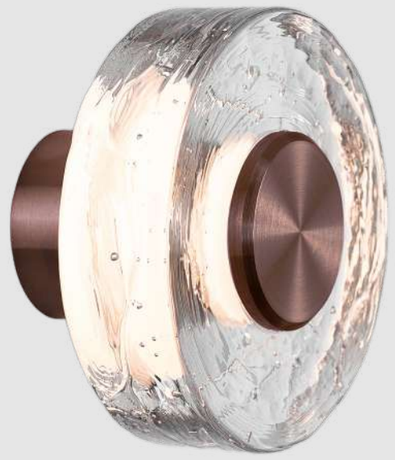

clear / brushed bronze

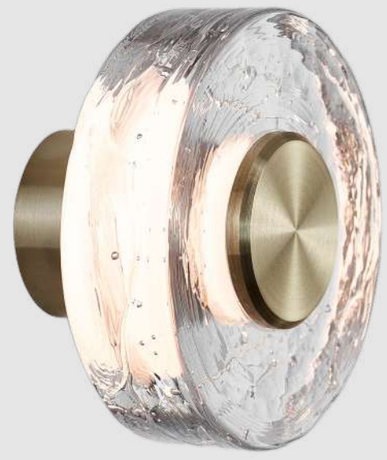

clear / brushed gold



clear / brushed silver

Ollo Technical Information

OLLO portable lamp

Design by
Václav Mlynář

Handmade glass attributes

All Bomma products are hand-made from mouth-blown lead-free crystal. Therefore any small bubbles, non-melts and irregularities in the glass are both proof and a characteristic feature of this traditional craft.

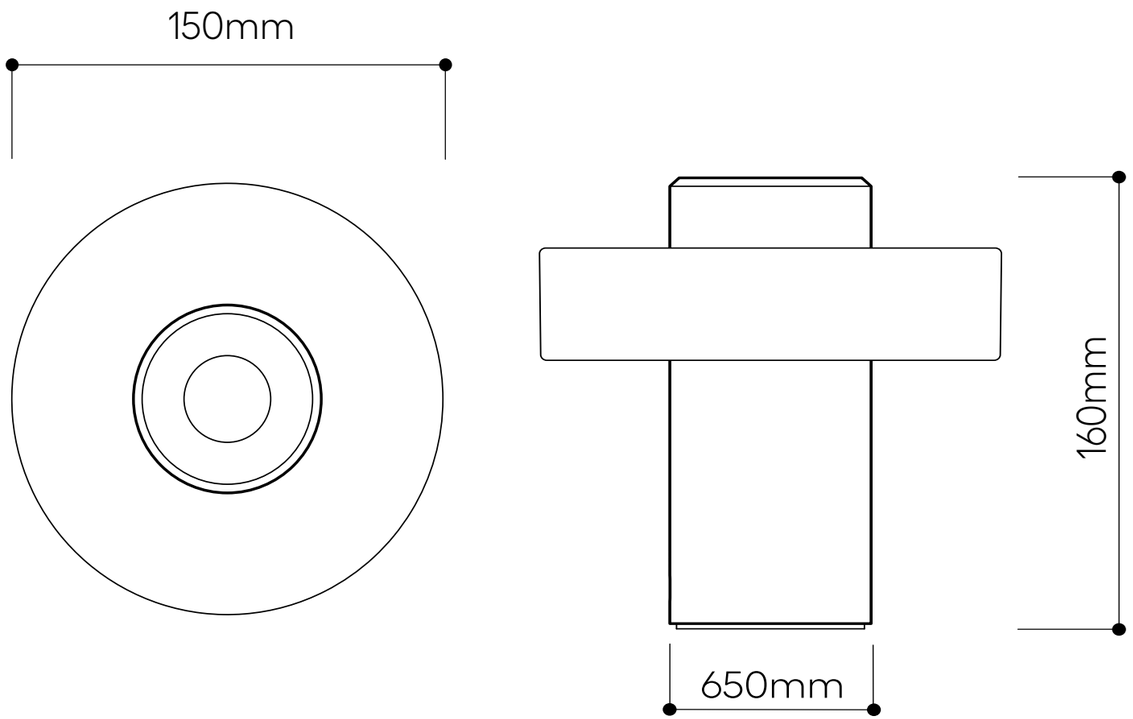

Ollo bomma

LIGHTING DESCRIPTION

Size	mounting dia. 65mm/2.5 in, glass dia. 150mm/5.9 in overall 150mm/5.9 in, height 160 mm/6.3 in
Mounting	brushed silver, brushed anthracite, brushed bronze
Material	stainless steel
Glass	cast lead-free crystal glass
Glass colour	crystal clear
Weight	+- 2.3 kg / 5.1 lb
Protection	IP 44
Battery	Li-Ion battery 4.2V 9000mA / 31Wh
	LED battery status control 25% 50% 75% 100%
	10 hours at 75% brightness
Charging	USB-C quick charge, ~ 3,5h till full charge
Nominal Voltage	5V / 2A / 10W
	cable is not included, charger is not included

LIGHT SOURCE

Type	LED module ring – 4W
Base	custom LUMILEDS LUXEON 3030 HE Plus
Temperature	tunable white 1850 - 4000 K
Luminous Flux	784 lm
Luminous Efficacy	196 lm/W
Color index	RA 90+
Dimming	integrated rotary knob

PACKAGING

Material	Cardboard
Size	220 × 220 × 250 mm 8.6 × 8.6 × 9.8 inch

Origin: traditionally produced in the Czech Republic
Intellectual property license holder: Bomma Czech Republic (EU)
Represented by BMRC group s.r.o.

CE

OLLO pendant

Design by
Václav Mlynář

Handmade glass attributes

All Bomma products are hand-made from mouth-blown lead-free crystal. Therefore any small bubbles, non-melts and irregularities in the glass are both proof and a characteristic feature of this traditional craft.

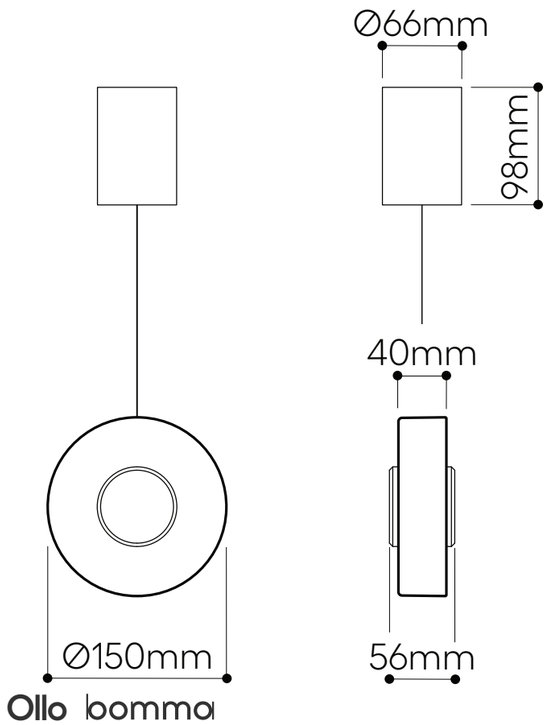

LIGHTING DESCRIPTION

Size	mounting dia. 65mm/2.5 in, glass dia. 150mm/5.9 in overall 150mm/5.9 in, height 56 mm / 2.2 in
Mounting	brushed bronze, brushed gold, brushed silver
Material	stainless steel
Glass	cast lead-free crystal glass
Glass colour	crystal clear
Cable	transparent 2,5 – 15 m (max) / 98,4 – 590,5 inch (max) per specific project
Weight	+-1.6 kg / 3.5 lb
Constant current	50 – 400 mA / 1 – 10 W
Class	III. EU / II. USA

LIGHT SOURCE

Type	LED module ring – 10W
Base	custom LUMILEDS LUXEON 3030 HE Plus
Temperature	selection 2100 / 2400 / 2650 / 2800 / 3400 K
Luminous Flux	up to 1960 lm
Luminous Efficacy	196 lm/W
Color index	RA 90+
Dimming	dimmable 5 – 100% @ all standards

PACKAGING

Material	Cardboard
Size	

Origin: traditionally produced in the Czech Republic
Intellectual property license holder: Bomma Czech Republic (EU)
Represented by BMRC group s.r.o.

CE

step beyond

BOMMA BMRC Group s.r.o. Pod dráhou 1638/7 Prague 7, 170 00 Czech Republic info@bomma.cz