mussels

JPN

Design: Václav Mlynář

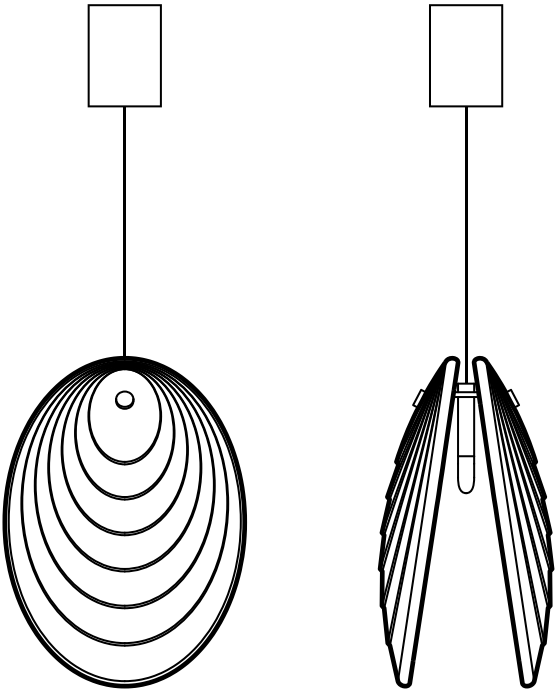

bomma

Installation Manual
for Pendant Light Fixtures

Keep for later use!

Introduction

- Please read this user's manual carefully prior to installation and follow its instructions and recommendations.
- The installation of the pendant light requires more than one person.
- For safety reasons, as well as for warranty purposes, it is forbidden to use this product in breach of this manual and other purposes stipulated in this manual.
- Prior to assembly, use an appropriate circuit breaker to turn off electricity.
- All interventions regarding the wiring of the light fixture may only be carried out by a qualified electrician.
- Prevent children or persons with lowered sensory or psychological abilities from handling the light fixture, as it contains small and fragile pieces that could be dangerous when inappropriately handled or ingested.
- The producer bears no liability for damage caused by improper installation.
- The dimensions and weight of glass parts may differ slightly due to manual production.
- All Bomma products are made from hand-blown lead-free crystal. Any small bubbles, non-melts and inhomogeneities in the glass are not a reason for complaint. This is a characteristic feature of this traditional craft.
- The surface of the mounting may also include minor imperfections due to manual production.
- The pendant light is intended for interior lighting.

Components included in the package

- Moulded glass part of the light fixture (2x)
- Mounting
- Allen key
- Special tool for screw tightening
- Dimmable light source
- Installation manual
- Maintenance instructions
- Installation manual for the transformer
- Gloves

Technical parameters, specifications

- Voltage input: 12 V DC
- Protection: IP 20
- Input power: 1x LED lamp max. 1,2 W (G4)
- Cable length: 2,5 m
- Weight: ~ 1,5 kg
- Size: 146 x 106 x 203 mm
- Light source: G4, 1,2W LED, 100 lm, 2700 K, RA 90+
- Class: III.

Recommended light source: LED G4, max. 1,2 W.

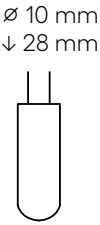

1

Upon opening, first determine that there was no damage occurred during transport and that the light fixture is complete. Otherwise, please contact your seller immediately, as later claims may not be considered.

Assemble the lighting fixture according to the manual, recognizing that its installation wiring may only be carried out by a qualified electrician following general legal regulations.

Unscrew the canopy (3) from the anchor plate (1).

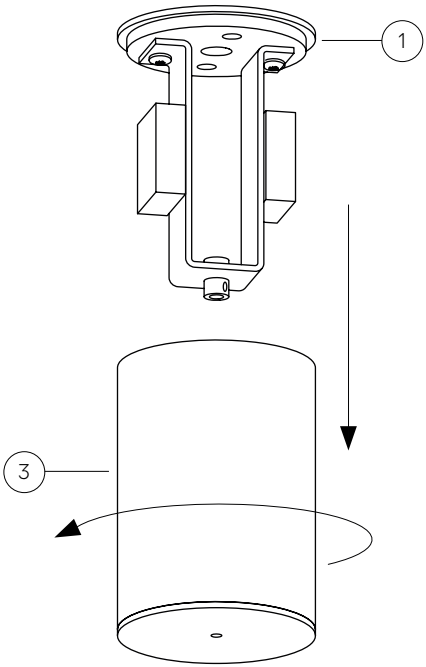

2

Slip the plate (1) on the incoming power supply cable from the ceiling and attach using appropriate screws and wall plugs, which are not included in the package. Select their size and type according to the material of your wall or ceiling and the weight of the fixture.

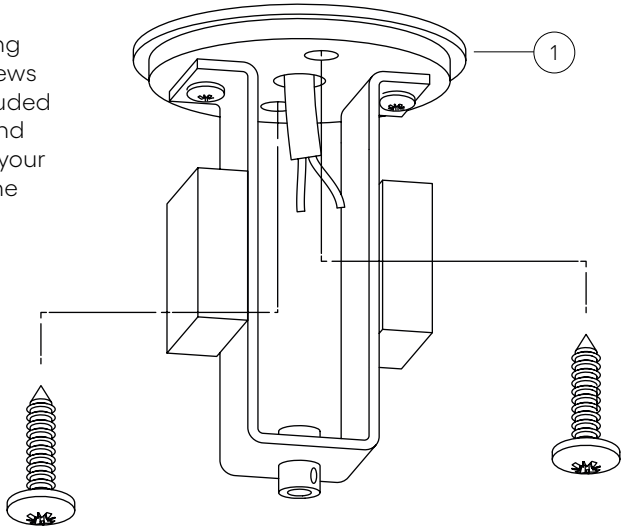

3

Shorten the cable to the required length for hanging the pendant light and remove wire insulation according to the diagram. The cable (+) and metal braid (-) will serve as conductors for electrical wiring.

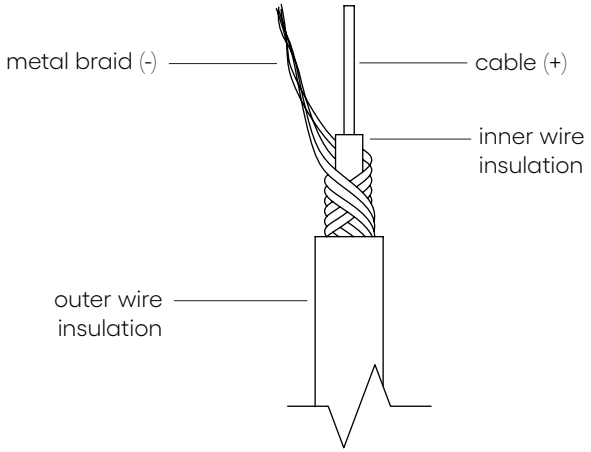

Video manual

4

Slip the cable (2) through the canopy (3) and then through the grommet (4). Fix the clamp on the cable just below the grommet (11) (detail A) and insert it into this grommet. Screw in the screw (10) so that it does not point into the groove in the clamping insert (detail B). Tighten the screw gently so that there was no damage to the cable. Thread the plastic lock (12) (detail C) on the cable. Finally, gently pull the cable to secure that it is properly fixed in the grommet.

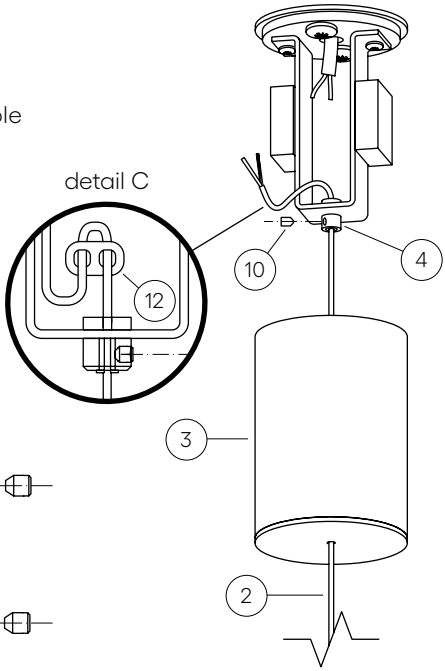

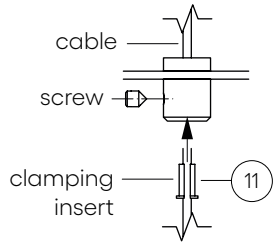

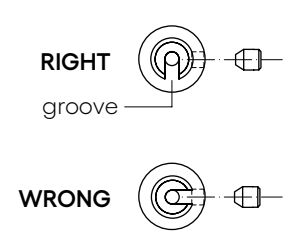

5

Insert the 12 V DC transformer (5) inside the metal “U” as shown.

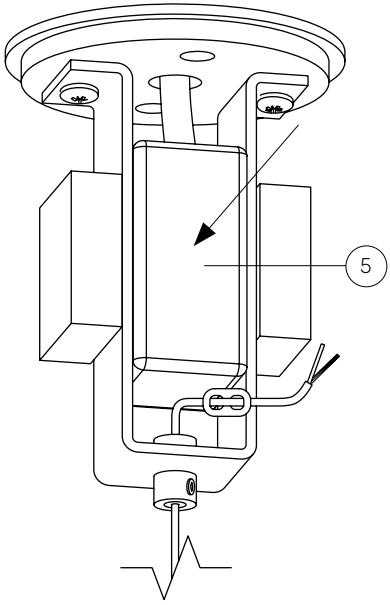

6

Install wiring according to the diagram. Use a 12V DC transformer.

When installing the transformer, follow the installation manual for the transformer, which is included in this packaging.

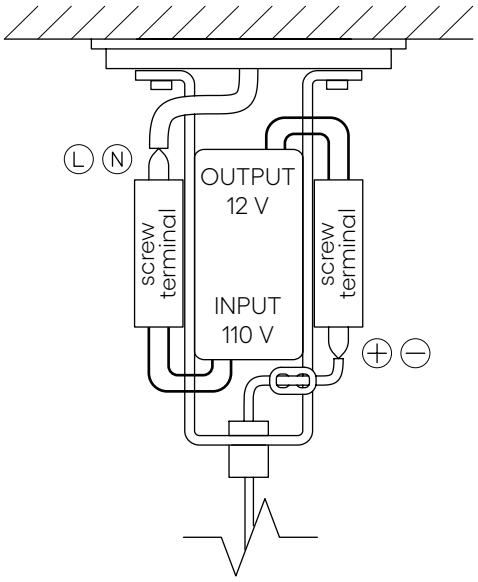

7

Move the canopy (3) to the ceiling and screw it onto the anchor plate (1).

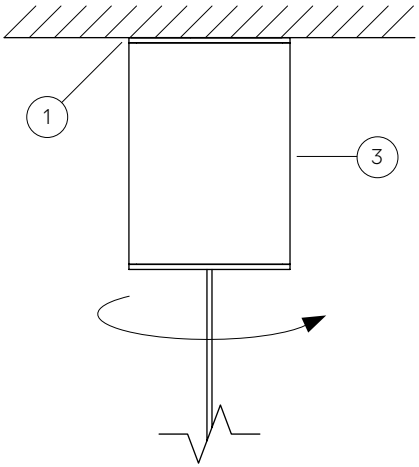

8

Screw the glasses holder (13) onto the mounting (8). Choose one of the two variants according to the required angle of the shell opening.

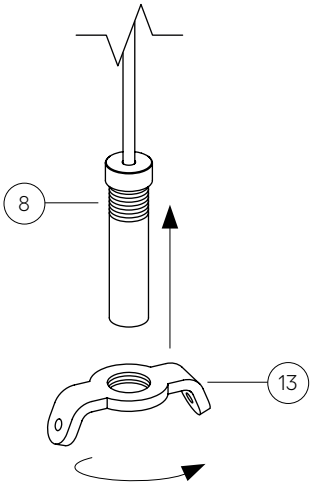

9

Screw the locking nut (14) on the mounting (8).

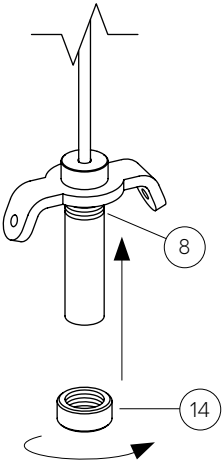

10

Insert a dimmable light source (6) into socket (7).

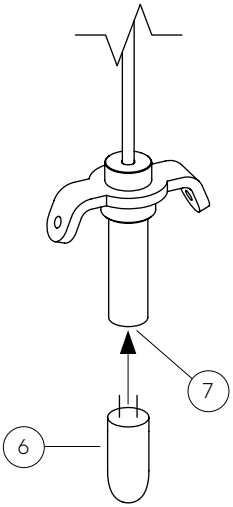

11

Into the holes in the glass parts (9) insert the plastic grommets (15) according to the picture.

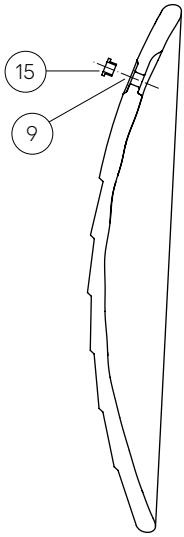

12

By means of a special tool (16) screw the glass (9) onto the holder (13). After tightening the pin at the end of screw (17) shall be completely visible on the inside of the handle.

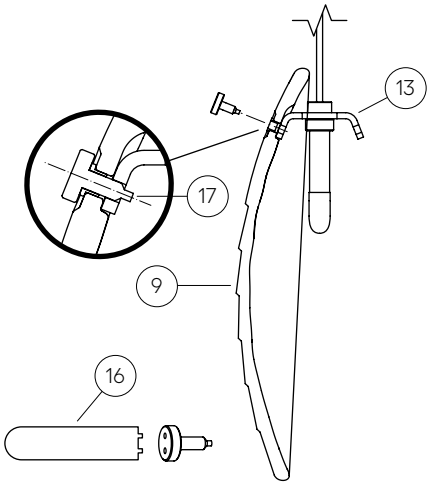

13

Place on the second glass and clean the light fixture from all fingerprints.

Congratulations! You may now reconnect the power and turn the light on.

When dismantling, first turn off the light and disconnect from the power supply. Then follow the above steps in reverse order. Use the original or similar packaging for possible later transport of the light fixture to prevent damage.

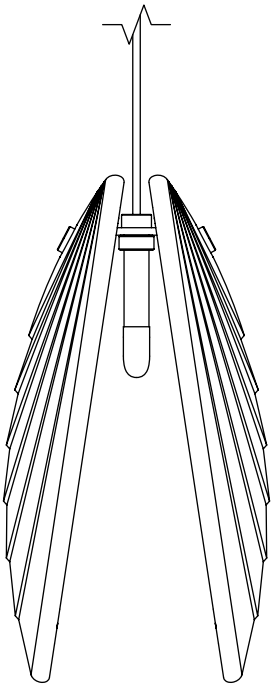

Maintenance

- When unpacking, assembling and cleaning the product, handle the individual parts with extra care, especially the glass parts which are very fragile.
- The assembly and wiring of the luminaire must be carried out by an authorized person.
- The pendant luminaire is intended for indoor use.
- We recommend consulting the suitability of the location and fixing of pendant luminaires to the ceiling material with a project manager, an engineer or other competent person.
- Do not cover the light source or touch the light source when the light is on.
- Do not make any repairs or changes to the components. Contact a specialist service center.
- Do not use any spare parts which have not been supplied or approved by the manufacturer (except for light sources).
- Do not expose the luminaire to an unsuitable environment where it might get damaged (water, heat, frost).
- Before servicing or cleaning pendant luminaires ensure sufficient access (ladder, scaffolding, mounting platform,...) so that you can reach and safely manipulate with the luminaire.
- **Warning:** the luminaire may in some parts have sharp edges which may cause injury. Take extra care when moving in close proximity to them.
- Any cleaning and maintenance should be carried out with the luminaire switched off and preferably disconnected (please mind this warning throughout the installation.)
- When changing a bulb, always disconnect the luminaire from the power supply.
- It is recommended to hang the luminaire at a sufficient height to avoid injury (such as head injury) to persons moving near the luminaire.
- It is recommended to install pendant luminaires in more than one person.
- After installing the luminaire, check that it is correctly and securely fixed to its base.
- Do not expose the luminaire to unreasonable loads, protect the luminaire from mechanical damage.
- The light source heats up during operation. Before starting any operation, wait until the light source cools down spontaneously _do not expose to rapid cooling_.
- When replacing the bulb, use the same or recommended light source (information about the type is on the label or in the installation instructions).
- Do not hang any other components on the luminaire in conflict with the manufacturer's installation instructions.
- Pay attention to checking all parts before their installation. Damaged components and glass parts _fragmentation, cracks_ can cause bodily injury to persons in their vicinity.
- Contact the manufacturer if a serious problem occurs during cleaning or maintenance of the luminaire.
- Any other manipulation with the luminaire should be carried out by qualified personnel or directly by the manufacturer.

Cleaning

- Any cleaning and maintenance should be carried out with the luminaire switched off and preferably disconnected.
- When cleaning, wear gloves. In particular, do not touch the plated crystal without gloves. This will prevent the formation of impressions, loss of luster and color.
- Use a soft duster to clean the metal parts. Metal parts can be cleaned with dry or dampened duster in lukewarm demineralized water. When cleaning the parts, do not under any circumstances use solvents, technical gasoline, technical cleaners, peroxides or alkalis. Avoid alcoholic agents, which could cause the change of surface color.
- Clean the bulb with a soft damp cotton cloth, an anti-static soft-bristled brush or a vacuum cleaner on the low setting.
- Clean the stainless steel surfaces with special products, sold for this purpose.
- To clean the glass parts, use a mild cotton cloth, dry or moistened in lukewarm demineralized water, or a duster. Immediately after cleaning, dry the product completely so that no drops of water remain on the product, and carefully hang it back up.
- Take extra care when cleaning the individual parts of the luminaire that cannot be disconnected. Excessive handling might result in loosening or chipping.
- Do not use a dishwasher to wash any removable parts of the luminaire.

Important notice

- The manufacturer accepts no liability for damage resulting from improper installation, improper handling of the luminaire, including installation combined with accessories other than those recommended by the manufacturer.
- The manufacturer accepts no liability for damage resulting from unprofessional tampering with the fixings and safety features of the luminaire or for damage to the product caused by improper power supply voltage, storage or use of the luminaire in damp environment.
- Do not store the pendant luminaire in a damp environment, near a boiler, trap or other sources of steam. Do not place the luminaire over a bathtub in bathrooms and do not touch the luminaire if you are in contact with water.
- The manufacturer reserves the right to make minor variations in the design of the luminaire without prior notice.

Disposal

Upon the expiration of the product's shelf life, proceed in accordance to legal regulations for environmental protection and public health safety.

Waste Materials Catalog

Number	Category	Name
10 11 11*	N	Waste glass
		in small particles
		and glass powder
		containing heavy metals
10 11 12	O	Waste glass other than those
		mentioned in 10 11 11
17 04 01	O	Copper, bronze, brass
17 04 05	O	Iron and steel
20 01 01	O	Paper and cardboard
15 01 05	O	Composite packaging

Contact

BMRC GROUP s.r.o.
Pod dráhou 1638/7, Holešovice,
170 00 Praha 7
Czech Republic
+420 569 453 149
info@bomma.cz
www.bomma.cz

Instagram bomma_cz
Facebook bommacz

bomma.cz

drawn by	approved by	revision	date	signature
Karel Jankovský	Petr Novotný	2	1. 2025	

Control

Date of packaging

step beyond