

Mussels boomma





Mussels boomma





Mussels boomma





Mussels Inspiration

Perfect shells reflecting crystal-clear water surface

Elegance, variability and an organic aesthetic, BOMMA introduces new MUSSELS collection. Imagine sparkling water hiding fascinating, incredibly detailed mussels. Two crystal shells surround a light source nested in a precise mounting within either glossy anthracite or brushed gold tones. The glass shell carries a rippling patterned imprint. When lit, it creates the effect of light reflecting from a water surface. Its inspiration in organic shapes, natural colors and the natural environment is apparent at first glance.

Design by Václav Mlynář





Mussels boomma

Mussels Production

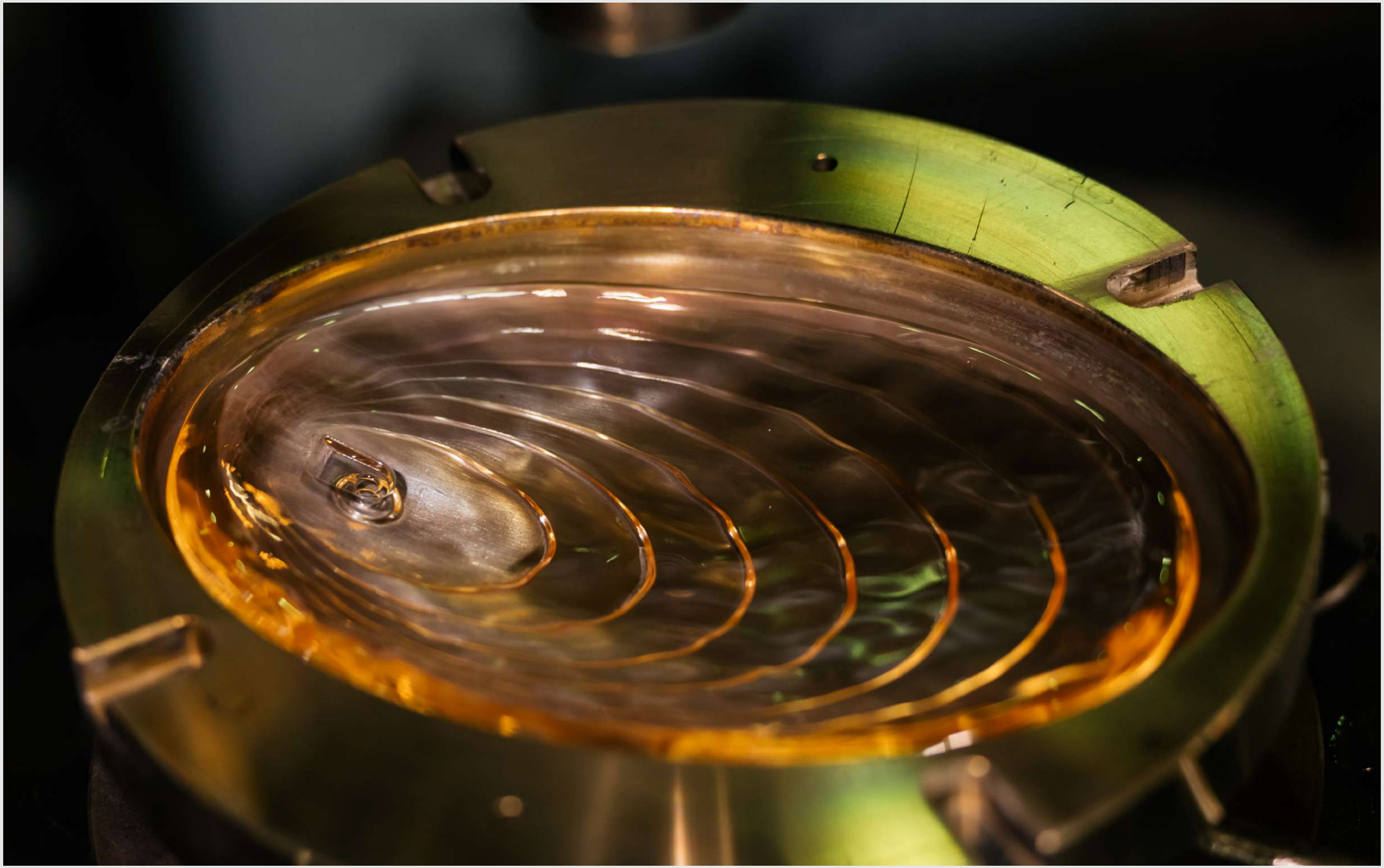

Mussels boomma



Mussels boomma





Mussels boomma

Václav Mlynář, Bomma art director and designer of the collection





Mussels boomma

Mussels Projects





Mussels boomma Kunsthalle Praha, Czechia, - 12 pcs of clear and alabaster mussels pendants





Mussels bomma

EUROLUCE 2025, Italy, Milan, interior by Studio Salaris a Václav Mlynář

Residence with charm staircase, Ukraine



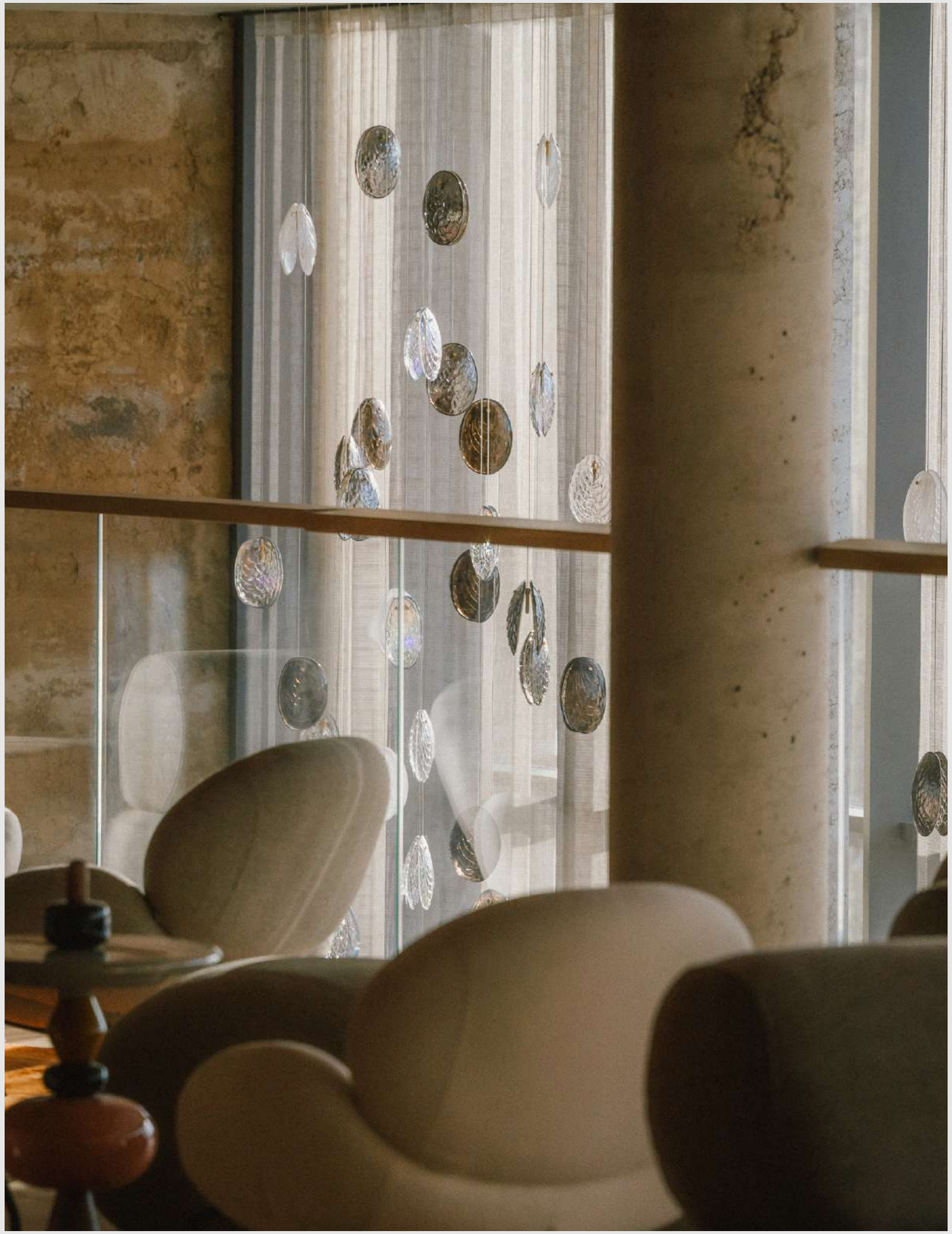

Mussels boomma

JSK Office, Prague 2025

Hotel Glar, Poland, 2024





Mussels boomma

Installation of clusters with 6, 12 and 18 pcs of clear mussels pendants





Mussels boomma Casa Escandi, 6 pcs of alabaster Mussels, Copenhagen 26 pcs, State of Architecture, PVD Verlichting, Belgium





Mussels boomma

Light + Building, 120 pcs of dark pearl, pearl and clear Mussels

MR Studio, Seattle, 18 pcs of smoke and clear Mussels



Mussels bomma Mussels in dark pearl, pearl and smoke, 32 pcs, BOMMA Atelier, Prague

Mussels Options

Options

Pendant

Glass options
alabaster / clear / dark pearl / pearl / smoke

Fitting options
brushed gold / anthracite



Alabaster / Anthracite | Clear / Brushed gold | Dark pearl / Anthracite | Pearl / Brushed gold | Smoke / Anthracite

Options

Wall

Glass options
alabaster / clear / dark pearl / pearl / smoke

Fitting options
brushed gold / brushed silver



Alabaster / Brushed silver | Clear / Brushed gold | Dark pearl / Brushed silver | Pearl / Brushed gold | Smoke / Brushed silver

Mussels Technical Information

MUSSELS
single pendant

Design by
Václav Mlynář

Handmade glass attributes

The Mussels Collection is made by our in-house developed, pressed glass technology. Any small bubbles, non-melts and irregularities in the glass are both proof and a characteristic feature of this unique glassmaking process.

The glass parts of Mussels are hand-painted, so the intensity of color may vary slightly.

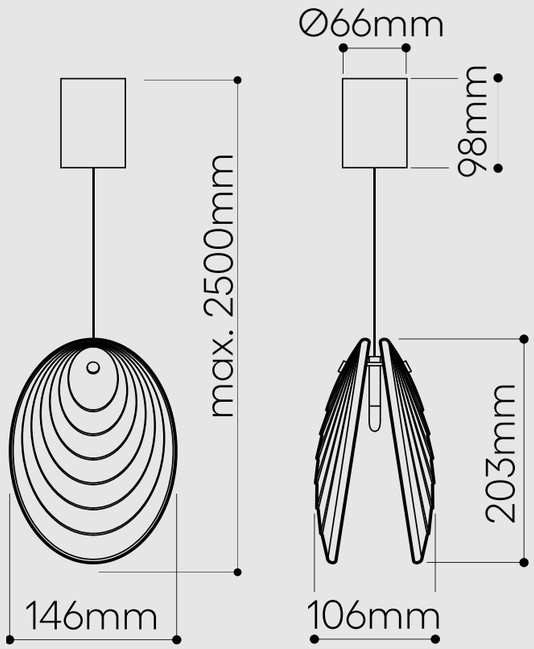

Mussels bomma

LIGHTING DESCRIPTION

Size	146 × 203 × 106 mm 5,7 × 8,0 × 4,2 inch
Cable	transparent 2,5 m / 98,4 inch
Weight	+- 1,5 kg / 3,3 lb
Glass	lead-free crystal in clear, alabaster, smoke, pearl and dark pearl
Mounting	brushed gold = brushed brass, anthracite = brass and galvanized black nickle
Protection	IP 20
Nominal voltage	220-240V / A.C. 50 hz (EU) 110-120 V / A.C. 60 Hz (USA)
Class	III. EU / II. USA

LIGHT SOURCE

Type	G4, 1,2W LED, 100 lm
Base	G4 (EU) / G4 (USA)
Voltage	12V, AC
Temperature	2700 K
Color index	RA 90+
Dimming	EU/Other versions - dimmable in constellations, non dimmable as a single pendant. UL/The Americas - dimmable in constellations and as a single pendant.

TRANSFORMER

Primary	100-240V, 50/60 Hz, 0,04A
Secondary	DC 700mA (0,5V–4V) 1×3W

PACKAGING

Material	Cardboard
Size	220 × 220 × 250 mm 8,7 × 8,7 × 9,8 inch

Origin: traditionally produced in the Czech Republic
Intellectual property license holder: Bomma Czech Republic (EU)
Represented by BMRC group s.r.o.

CERTIFICATES

MUSSELS wall

Design by
Václav Mlynář

Handmade glass attributes

The Mussels Collection is made by our in-house developed, pressed glass technology. Any small bubbles, non-melts and irregularities in the glass are both proof and a characteristic feature of this unique glassmaking process.

The glass parts of Mussels are hand-painted, so the intensity of color may vary slightly.

option A

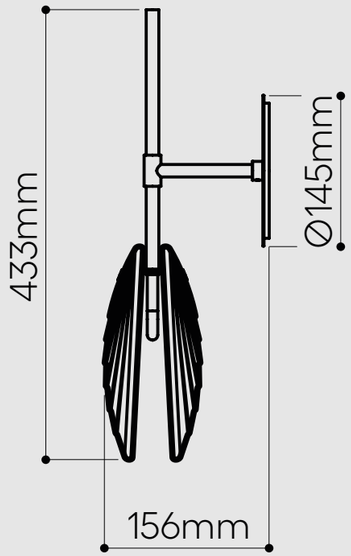

option B

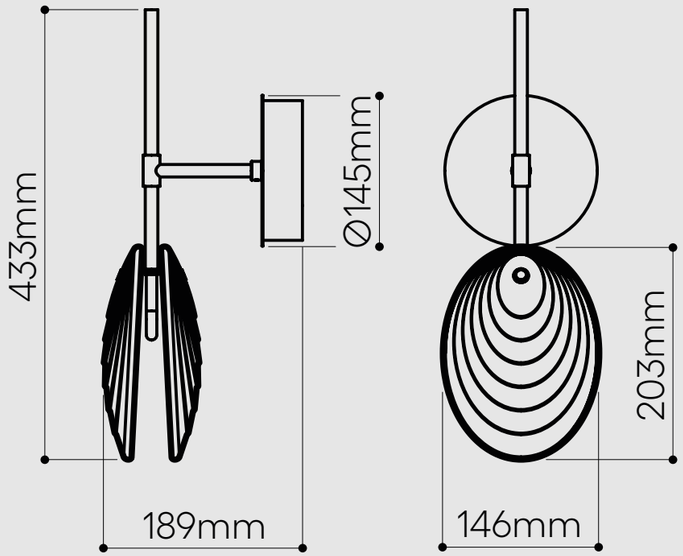

Mussels bomma

LIGHTING DESCRIPTION	
Size	146 × 156 (189) × 433 mm 5,75 × 6,14 (7,4) × 17,05 inch
Weight	+- 2,5 kg / 5,5 lb
Glass	lead-free crystal in clear, alabaster, smoke, pearl and dark pearl
Mounting	brushed gold = brushed brass
Recommended junction box	EU - A.UK1-SH (72mm dia, 60mm min. depth) UL/The Americas - electrical box, Octagon, 4 X 4 inch (1,4 inch min. depth)
Protection	IP 20
Nominal voltage	220-240V / A.C. 50 hz (EU) 110-120 V / A.C. 60 Hz (USA)
Class	II. EU / I. USA

LIGHT SOURCE	
Type	G4, 1,2W LED, 100 lm
Base	G4 (EU) / G4 (USA)
Voltage	12VDC, 100mA
Temperature	2700 K
Color index	RA 90+
Dimming	EU/Other versions - non-dimmable UL/The Americas - TRIAC, ELV

TRANSFORMER	
Primary circuit	100-240V, 50/60 Hz
Secondary circuit	12VDC, +-0,5A, 5W

PACKAGING	
Material	Cardboard
Size	220 × 220 × 250 mm 8,6 × 8,6 × 9,8 inch

Origin: traditionally produced in the Czech Republic
Intellectual property license holder: Bomma Czech Republic (EU)
Represented by BMRC group s.r.o.

CERTIFICATES

step beyond

BOMMA BMRC Group s.r.o. Pod dráhou 1638/7 Prague 7, 170 00 Czech Republic info@bomma.cz