

Lens bomma





Lens bomma





Lens bomma

Lens Inspiration

The perfect optics of pure crystal.

Light refracted through a lens is the fundamental principle of optics. Here, two lenses harmoniously encapsulate their interior source, playing a symphony of lights. Classic clear crystal is offset by a single color that highlights its refraction. A hypnotic design, asking only unique composition and arrangement.

Design by Studio Václav Mlynář & Jakub Pollág

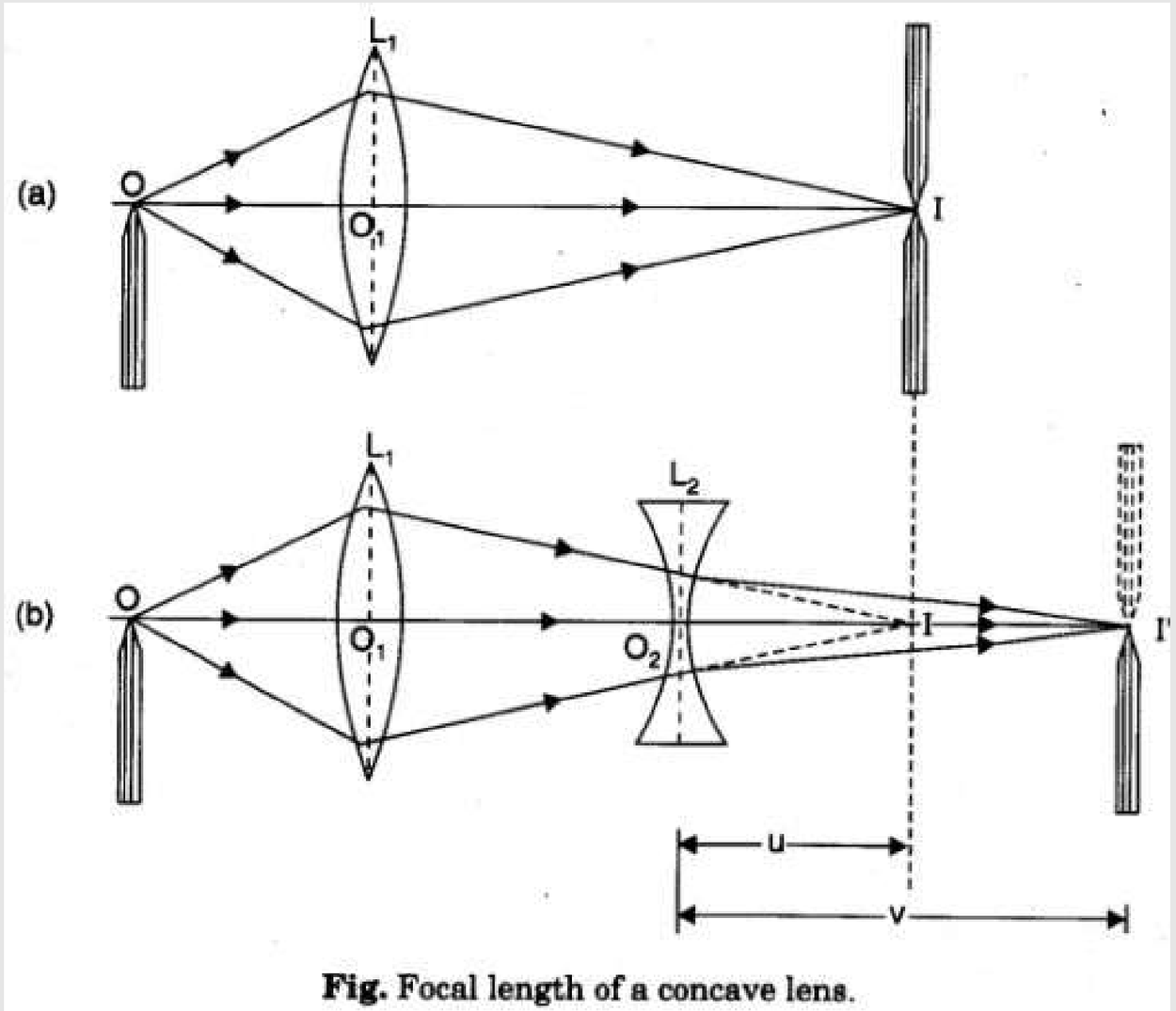

Fig. Focal length of a concave lens.

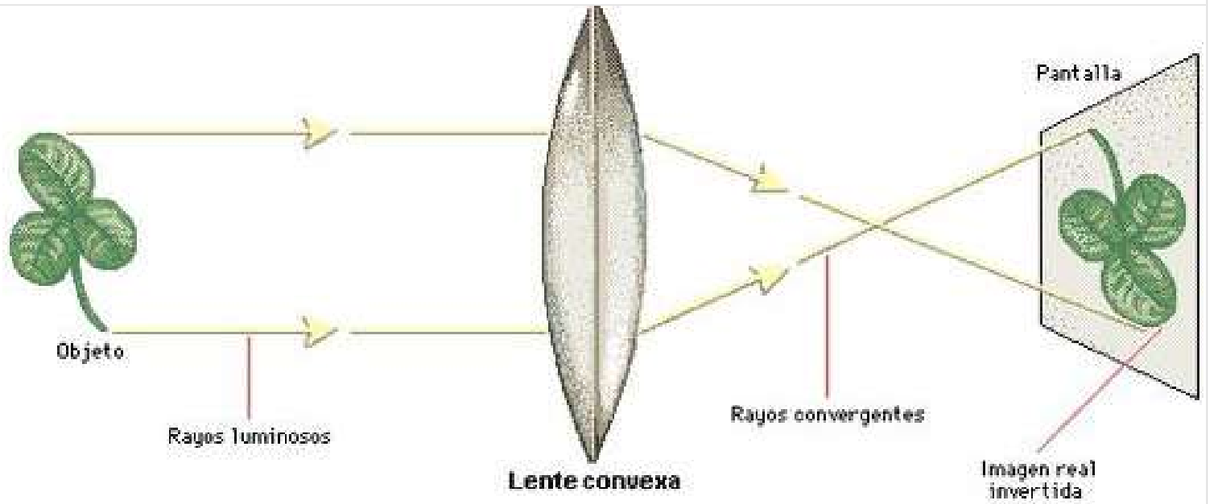

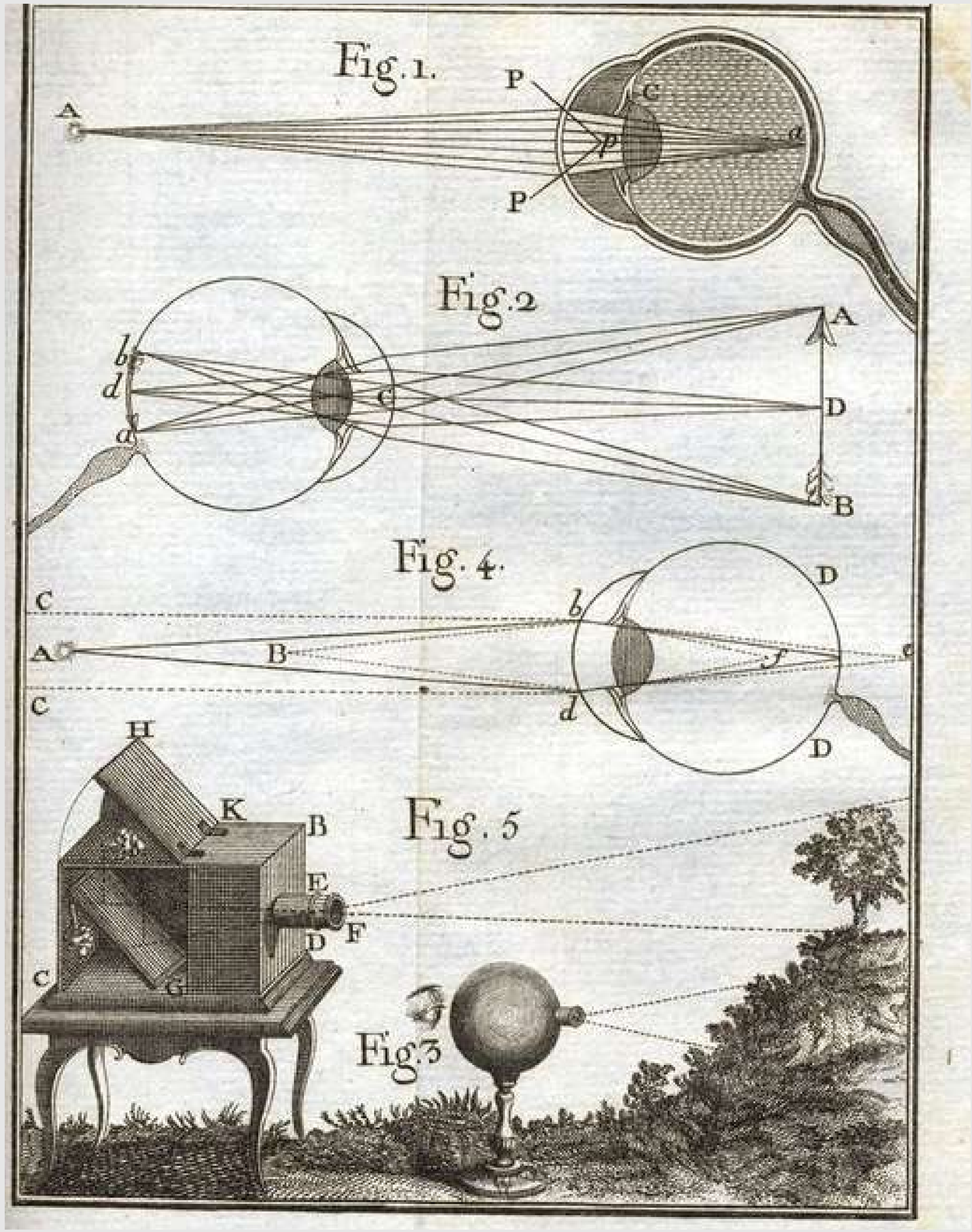

Lens boomma

Lens Production



Lens bomma

Lens Projects





Lens bomma Masaryčka, Czechia Euroluce 2025, Italy, Milan, Interior by Studio Salaris and Václav Mlynář





Lens bomma NR7 Offices, Prague, 2025



Lens bomma Installation of 40 pcs of white, blue and clear Lens





Lens bomma Installation of 41 pcs of smoke and clear Lens Private villa, Channel Islands





Lens bomma

Installation of 126 pcs of white and clear Len

Installation of 12 pcs - visualization





Lens bomma BOMMA Atelier, Prague. 2021 Casa Escandi, Copenhagen - wall lamp in white colour





Lens bomma

Installation of 25 pcs of dark green and beige Lens with 4 pcs of technical light Beam

Private residence in Whistler by FMD Design, Canada

Lens Options

Options

Pendant

Glass options
clear
white
smoke
amber
beige
dark green
mocha mousse
silver

Fitting options
brushed gold
anthracite

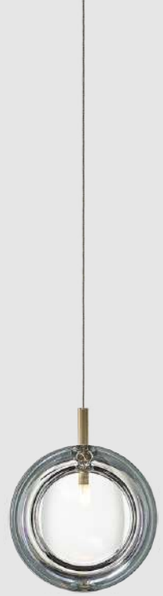

Clear / Brushed gold



White / Anthracite

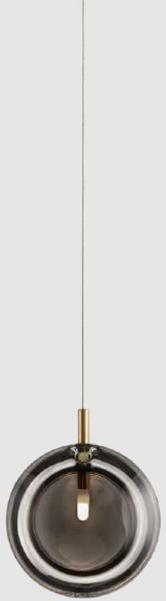

Smoke / Brushed gold



Amber / Anthracite

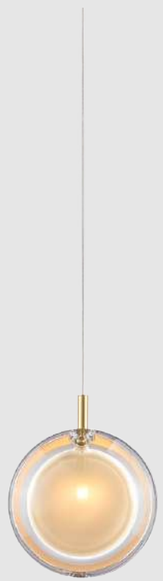

Beige / Brushed gold



Dark green / Anthracite



Mocha mousse / Brushed gold



Silver / Anthracite

Options

Wall

Glass options
clear
white
smoke
amber
beige
dark green
mocha mousse
silver

Fitting options
brushed gold
brushed silver



Clear / Brushed gold



White / Brushed silver



Smoke / Brushed gold



Amber / Brushed silver



Beige / Brushed gold



Dark green / Brushed silver



Mocha mousse / Brushed gold



Silver / Brushed silver

Lens
Technical Information

LENS pendant

Design by
Studio deFORM

Handmade glass attributes

The Lens Collection is made by our in-house developed, pressed glass technology. Any small bubbles, non-melts and irregularities in the glass are both proof and a characteristic feature of this unique glassmaking process.

The glass parts of Lens are hand-painted, so the intensity of color may vary slightly.

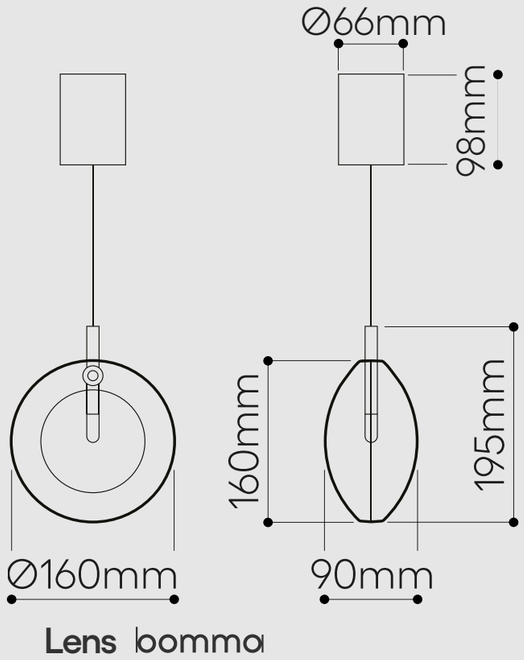

LIGHTING DESCRIPTION

Size	160 × 195 × 90 mm 6,2 × 7,7 × 3,5 inch
Cable	transparent 2,5 m / 98,4 inch
Weight	+- 2,5 kg / 5,5 lb
Glass	lead-free crystal in white, clear, amber, smoke, blue grey, beige, dark green, mocha mousse, silver
Mounting	brushed gold (brushed brass) anthracite (brass and galvanized black nickel)
Protection	IP 20
Nominal voltage	12 V DC, 50 / 60 hz
Class	III. EU / II. USA

LIGHT SOURCE

Type	G4, 1,2W LED, 100 lm
Base	G4 (EU) / G4 (USA)
Voltage	12 V DC
Temperature	2700 K
Color index	RA 90+
Dimming	EU/Other versions - dimmable in constellations, non dimmable as a single pendant. UL/The Americas - dimmable in constellations and as a single pendant.

PACKAGING

Material	Cardboard
Size	220 × 220 × 250 mm 8,6 × 8,6 × 9,8 inch

Origin: traditionally produced in the Czech Republic
Intellectual property license holder: Bomma Czech Republic (EU)
Represented by BMRC group s.r.o.

CERTIFICATES

LENS wall

Design by
Václav Mlynář and Jakub Pollág

Handmade glass attributes

The Lens Collection is made by our in-house developed, pressed glass technology. Any small bubbles, non-melts and irregularities in the glass are both proof and a characteristic feature of this unique glassmaking process.

The glass parts of Lens are hand-painted, so the intensity of color may vary slightly.

option A

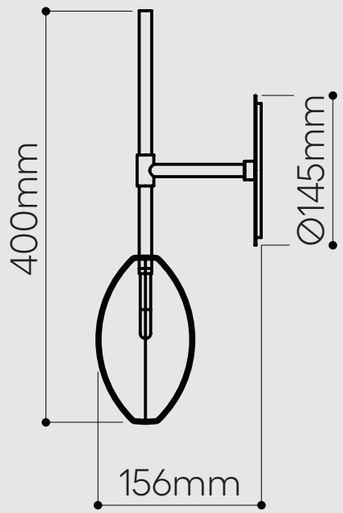

option B

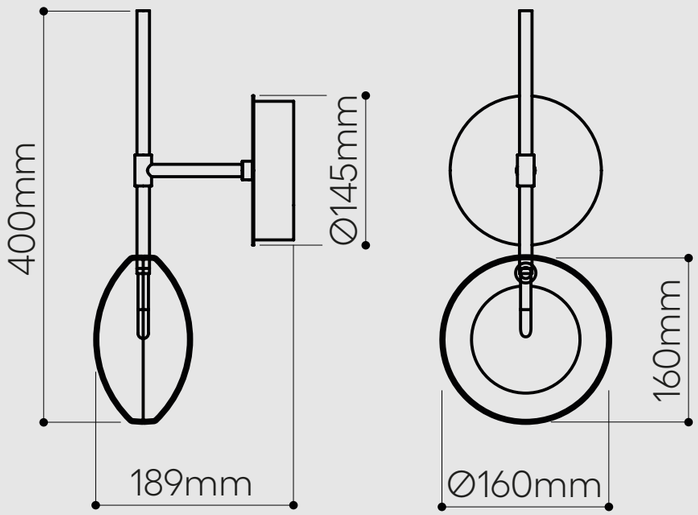

Lens bomma

LIGHTING DESCRIPTION	
Size	160 × 156 (189) × 400 mm 6,2 × 6,14 (7,4) × 15,75 inch
Weight	+- 3,5 kg / 7,7 lb
Glass	lead-free crystal in white, clear, amber, smoke, blue grey, beige, dark green, mocha mousse, silver
Mounting	brushed silver (brushed stainless steel) brushed gold (brushed stainless steel gold nitridated)
Recommended junction box	EU - A.UK1-SH (72mm dia, 60mm min. depth) UL/The Americas - electrical box, Octagon, 4 X 4 inch (1,4 inch min. depth)
Protection	IP 20
Nominal voltage	220-240V / A.C. 50 hz (EU) 110-120 V / A.C. 60 Hz (USA)
Class	II. EU / I. USA

LIGHT SOURCE	
Type	G4, 1,2W LED, 100 lm
Base	G4 (EU) / G4 (USA)
Voltage	12VDC, 100mA
Temperature	2700 K
Color index	RA 90+
Dimming	EU/Other versions - non-dimmable UL/The Americas - TRIAC, ELV

TRANSFORMER	
Primary circuit	100-240V, 50/60 Hz,
Secondary circuit	12VDC, +-0,5A, 5W

PACKAGING	
Material	Cardboard
Size	220 × 220 × 250 mm 8,6 × 8,6 × 9,8 inch

CERTIFICATES

step beyond

BOMMA BMRC Group s.r.o. Pod dráhou 1638/7 Prague 7, 170 00 Czech Republic info@bomma.cz