Lens 18x

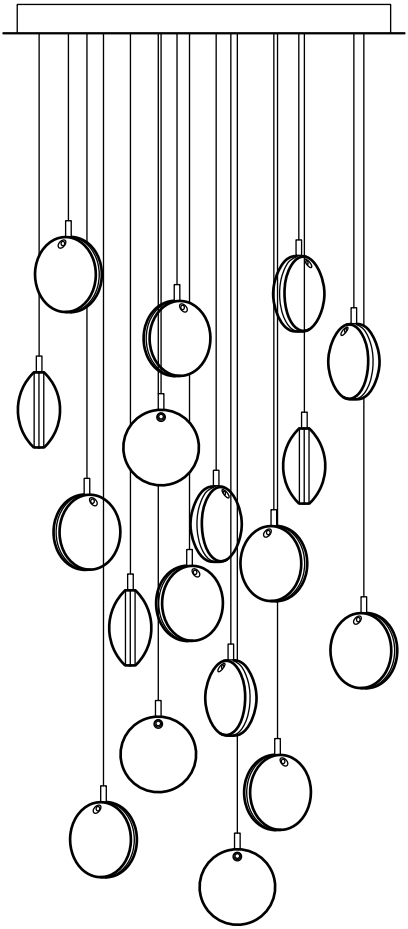

Installation Manual
for Multiple Canopy

Don't throw away!

bomma

Introduction

• Please read this user's manual carefully prior to installation and follow its instructions and recommendations.
• The installation of the pendant light requires more than one person.
• This is a general guide. The shape and size of the ceiling canopy in the pictures of the assembly process may not correspond to the actual shape and size of the canopy you have purchased, however, the installation principle remains the same.
• For safety reasons, as well as for warranty purposes, it is forbidden to use this product in breach of this manual and other purposes stipulated in this manual.
• Prior to assembly, use an appropriate circuit breaker to turn off electricity.
• All interventions regarding the wiring of the light fixture may only be carried out by a qualified electrician.
• The producer bears no liability for damage caused by improper installation.
• The surface of the mounting may also include minor imperfections due to manual production.
• The pendant light is intended for interior lighting.
• The producer reserves the right to make minor changes to the construction of the light fixture without prior notice.

Components included in the package

- Moulded glass part of the light fixture (36x)
- Mounting (18x)
- Dimmable light source (18x)
- Canopy
- Allen key
- Installation manual
- Gloves (2x)

Technical parameters, specifications

- Voltage input: 12 V DC
- Protection: IP 20
- Input power: 1x LED lamp max. 3 W (G4)
- Cable length: 2,5 m
- Weight: ~ 2,5 kg
- Size: 160 x 195 x 90 mm
- Light source: G4, 3 W LED, 100 lm, 2700 K, RA 90+
- Class: III.

Recommended light source: LED G4, max. 3 W.
Recommended transformer: LPV-60-12, 60W, 12VDC
Recommended controler: LP-CONTROLER-4in1

⌀ 10 mm
↑↓ 28 mm



Ø850

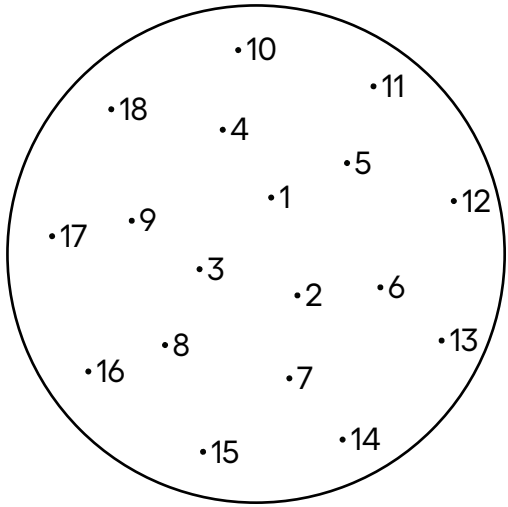

---

canopy height: 62 mm
canopy weight: 24 kg
total weight of this assembly: ~69 kg

Cable lengths for different color combinations

monochromatic

1: 92cm
2: 168cm
3: 141cm
4: 53cm
5: 149cm
6: 80cm
7: 129cm
8: 114cm
9: 159cm
10: 109cm
11: 43cm
12: 119cm
13: 58cm
14: 100cm
15: 76cm
16: 39cm
17: 68cm
18: 94cm

color mix - clear, white

1: 92cm (clear)
2: 168cm (white)
3: 141cm (clear)
4: 53cm (white)
5: 149cm (clear)
6: 80cm (clear)
7: 129cm (white)
8: 114cm (white)
9: 159cm (white)
10: 109cm (clear)
11: 43cm (white)
12: 119cm (white)
13: 58cm (clear)
14: 100cm (clear)
15: 76cm (clear)
16: 39cm (white)
17: 68cm (clear)
18: 94cm (white)

color mix - red, white

1: 92cm (red)
2: 168cm (white)
3: 141cm (red)
4: 53cm (white)
5: 149cm (red)
6: 80cm (red)
7: 129cm (white)
8: 114cm (white)
9: 159cm (white)
10: 109cm (red)
11: 43cm (white)
12: 119cm (white)
13: 58cm (red)
14: 100cm (red)
15: 76cm (red)
16: 39cm (white)
17: 68cm (red)
18: 94cm (white)

1

Before you begin, see the Fixing plan (p. 10) and Examples of recommended fixing (p. 11). Don‘t screw the glass onto the mountings until the canopy installation is complete (step 8).
For easier handling, disconnect the canopy from the anchor plate using a snap-hook.
When reconnecting, make sure that there are red marks on the anchor plate and the canopy overlapped.
Thread the anchor plate on the supply conductor from the ceiling and fasten it appropriately according to the safety and local standards in accordance with the weight of the light fixture and the ceiling material (threaded rod, wall plugs and screws, others - these are not part of the package).
Bomma bears no responsibility for the chosen solution or its implementation.

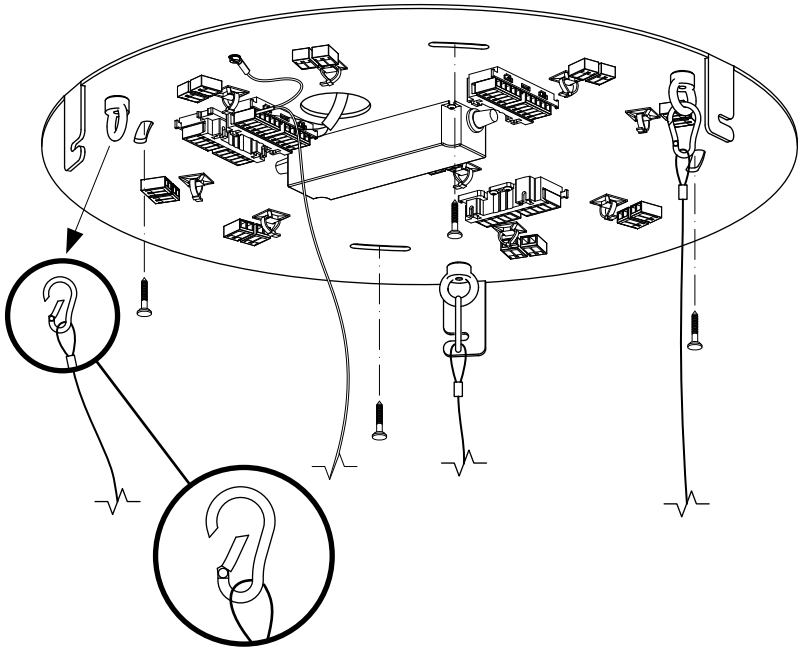

2

If you are to shorten the individual cables, follow the picture below.
Measure the specific cable length from the table on the previous page from the end of the mounting of the corresponding number and thread a clamping insert on the cable in this place. Measure another 55 cm from the clamp and cut the cable at this point.

If you do not want to shorten the cable, in step 5 twist the excess cable length inside the canopy into a ball and secure with tape to prevent unwinding.

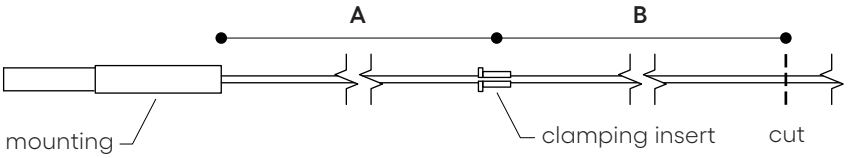

A: visible cable length (data from the table)

B: extra length 55 cm for connection inside the canopy

3

Insulate the end of the cable and prepare it as shown.
Cable (+) and wire plait (-) will serve as wires for electrical installation.

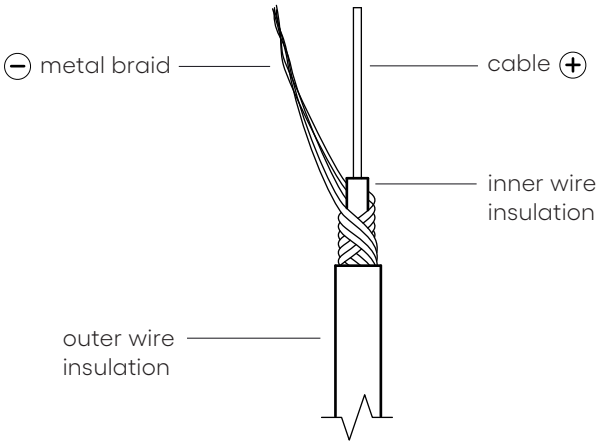

4

Thread the ends of the cable through the grommets in the canopy (picture A). Numerical designation of the cable must match the grommet number (sticker inside the canopy). Slide the clamping insert into the grommet (picture B) and drive the screw into so that it does not point into the groove in the clamping insert (picture C). After that, thread the plastic lock (picture D) on the cable.
Eventually, pull the cable sensitively and make sure it is firmly fixed in the grommet.

picture **A**

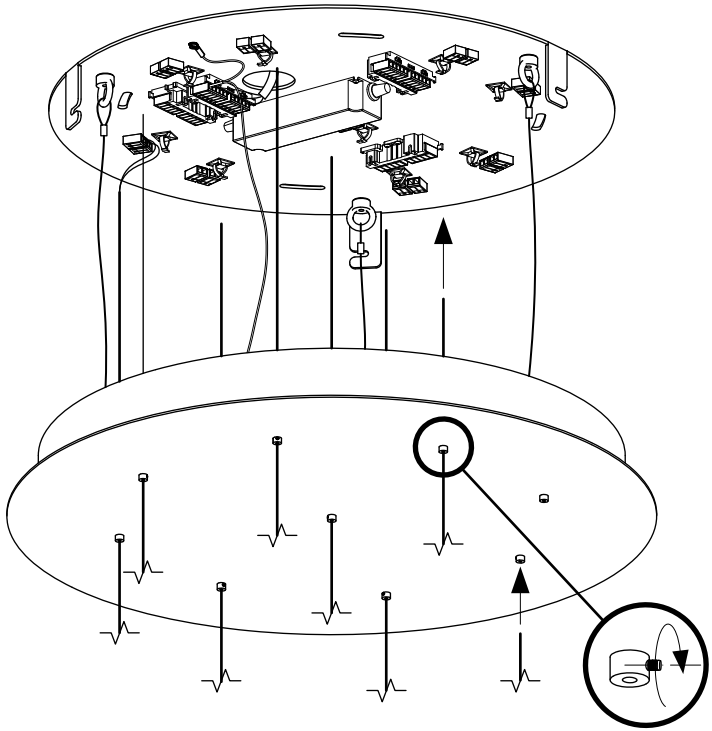

picture **B**

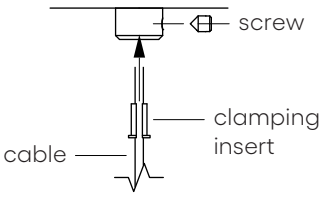

picture **C**

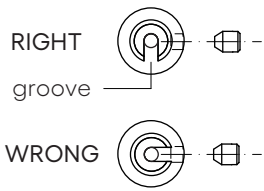

picture **D**

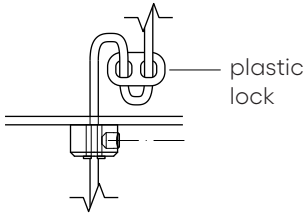

5

Perform the wiring according to the diagram. The image is for illustrative purposes only and may not match the configuration you purchased. The principle of installation is the same for all canopy sizes and shapes.
Connect the cable ends (+) and (-) to the prepared terminals.

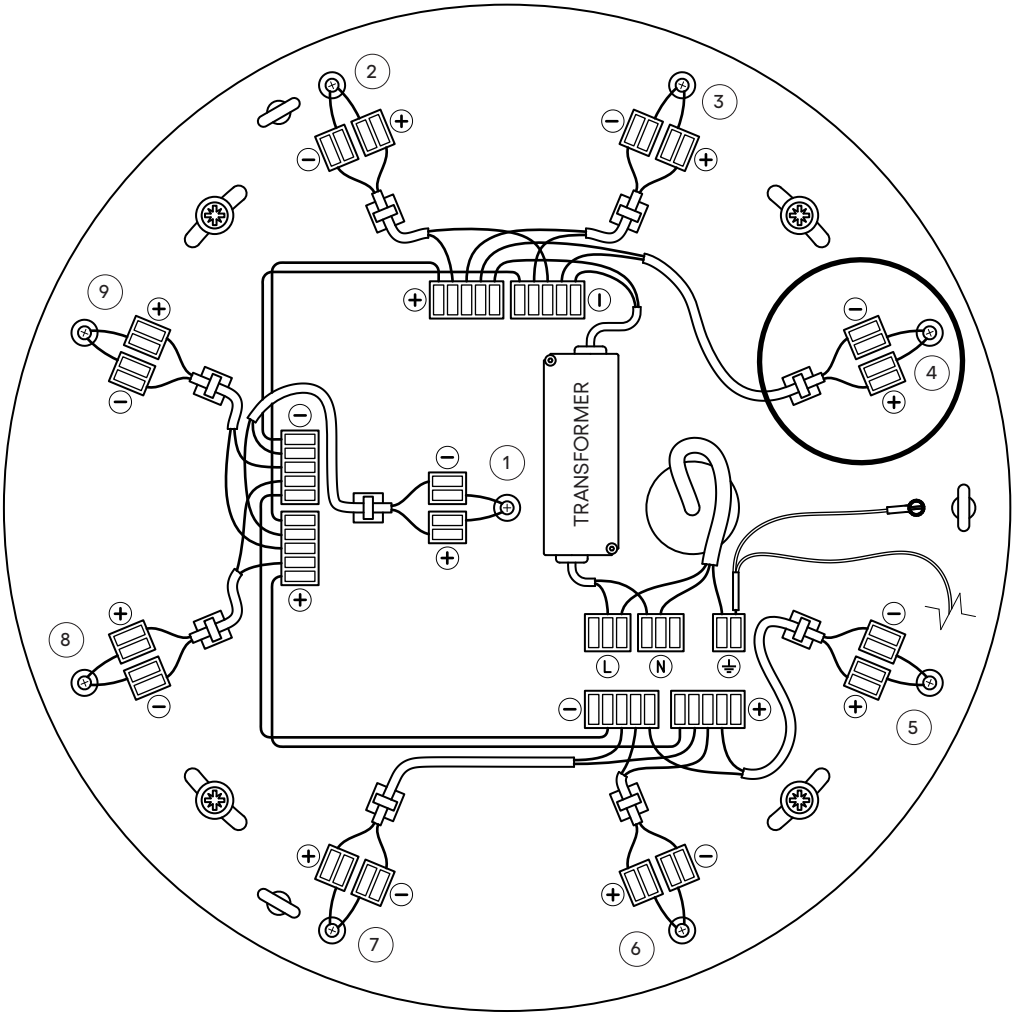

6

Lift the canopy onto the anchor plate and turn it so that the three screws on the inside of the canopy slide into the cut-out in the bearing feet of the anchor plate.
Make sure that the red marks on the anchor plate and the canopy overlap.

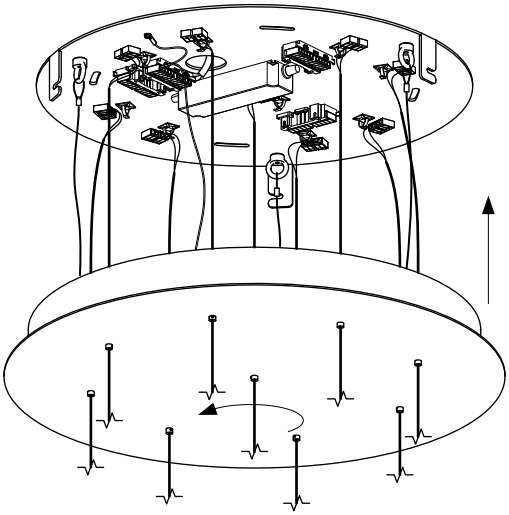

7

Screw in the locking screw completely.
If the screw cannot be screwed in completely, it means the canopy is wrong mounted on the anchor plate.

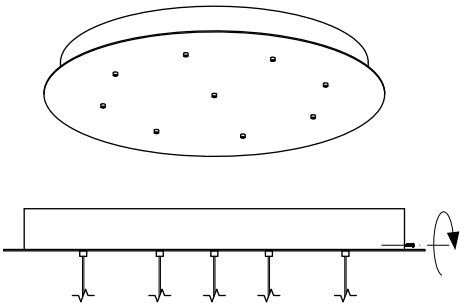

8

Insert the bulb into the socket (picture A).
Screw the glass part onto the mounting (picture B).
Clean the light fixture from all fingerprints.

picture **A**

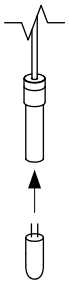

picture **B**

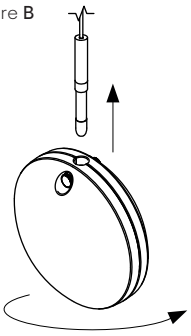

Congratulations! You may now reconnect the power and turn the light on.

When dismantling, first turn off the light and disconnect from the power supply. Then follow the above steps in reverse order. Use the original or similar packaging for possible later transport of the light fixture to prevent damage.

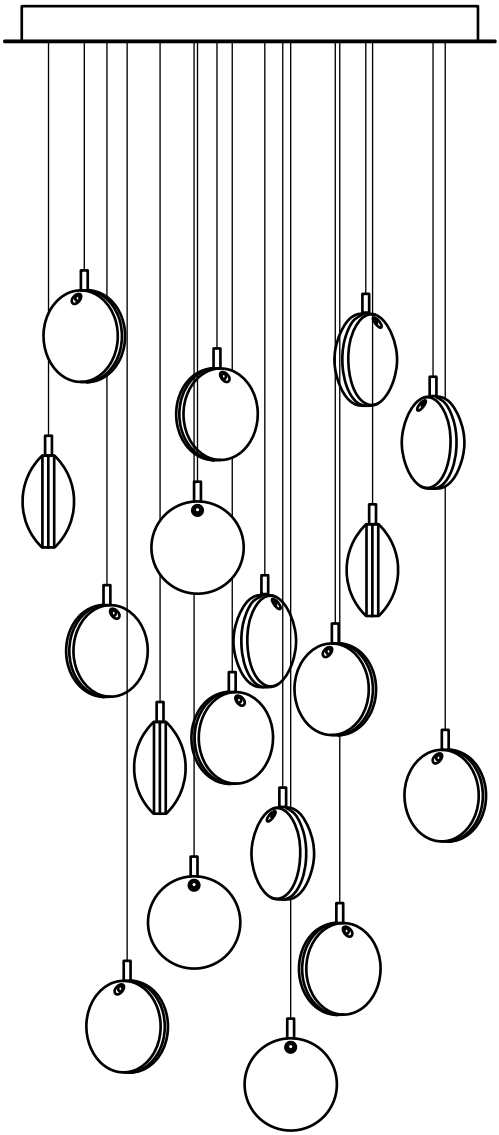

Fixing plan

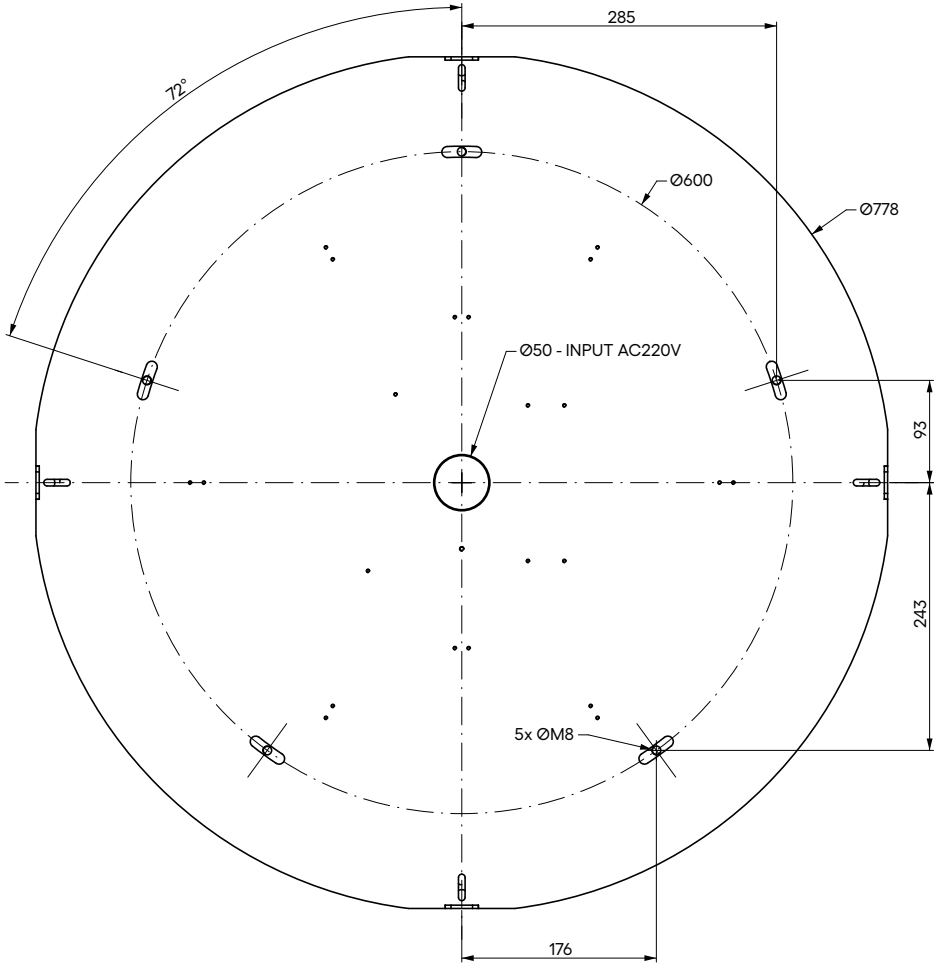

Examples of recommended fixing

1) Anchoring directly to the ceiling

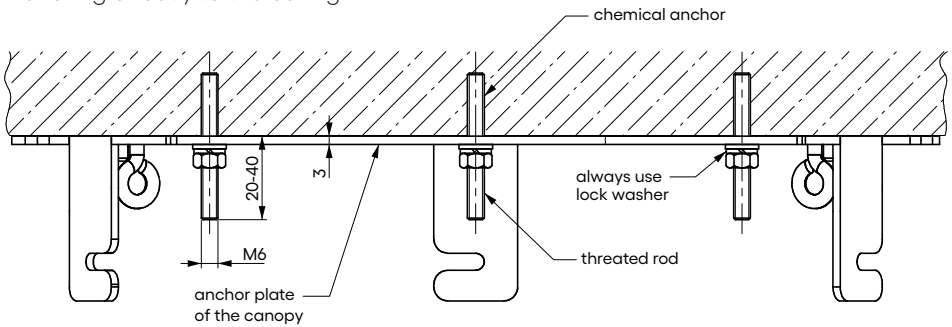

2) Anchoring to the false ceiling

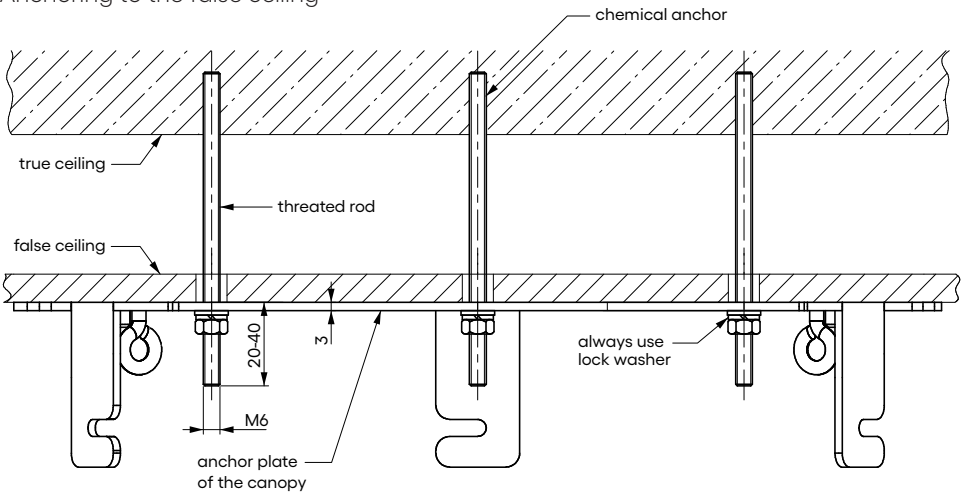

The ceiling and support preparation, the compliance with local building code and responsibility for safety, security and structural soundness is born by the client and the client´s main contractor / ceiling contractor.

Bomma bears no responsibility for the preparation of the ceiling or threaded rods and accepts no responsiblity for the safety of installation.

Disposal

Upon the expiration of the product's shelf life, proceed in accordance to legal regulations for environmental protection and public health safety.

Waste Materials Catalog

Number	Category	Name
10 11 11*	N	Waste glass
		in small particles
		and glass powder
		containing heavy metals
10 11 12	O	Waste glass other than those
		mentioned in 10 11 11
17 04 01	O	Copper, bronze, brass
17 04 05	O	Iron and steel
20 01 01	O	Paper and cardboard
15 01 05	O	Composite packaging

Contact

BMRC GROUP s.r.o.
Hvězdova 1716/2b
140 78 Praha
Czech Republic
+420 569 453 149
info@bomma.cz
www.bomma.cz

Instagram bomma_cz
Facebook bommacz

bomma.cz

drawn by	approved by	revision	date	signature
Karel Jankovský	Ota Svoboda	1	06. 2022	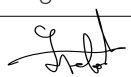

Control

Date of packaging

step beyond