radial canopy

for bomma constellation collections

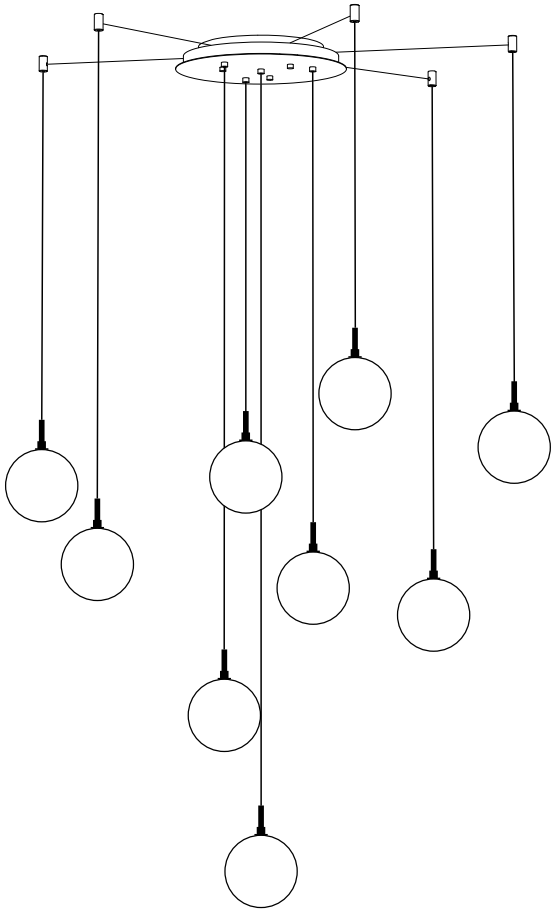

bomma

Installation Manual
for Radial Canopy

Introduction

- Please read this user's manual carefully before installation and follow its instructions and recommendations.
- Installation of the radial canopy requires more than one person.
- This is a general installation guide. The shape and size of the ceiling canopy shown in the assembly illustrations may not correspond to the actual canopy you have purchased; however, the installation principle remains the same.
- For safety reasons and for warranty purposes, it is forbidden to use this product in breach of this manual or for any purposes other than those stated in it.
- Before assembly, use an appropriate circuit breaker to turn off the power supply.
- All work relating to the wiring of the light fixture may only be carried out by a qualified electrician.
- Prevent children or persons with reduced sensory or mental capabilities from handling the light fixture, as it contains small and fragile parts that could be dangerous if handled improperly or ingested.
- The manufacturer accepts no liability for damage caused by improper installation.
- The dimensions and weight of glass parts may vary slightly due to manual production.
- The surface of the mounting may also contain minor imperfections due to manual production.

Components included in the pendant package

- Canopy
- Allen key
- Installation manual
- Gloves

BEFORE INSTALLATION

After unpacking, first check that no damage occurred during transport and that the lighting fixture is complete. If not, contact your dealer immediately, as later claims will not be recognised.

Assemble the lighting fixture according to the instructions, provided that the electrical installation is carried out by a qualified and authorised electrician in compliance with all applicable regulations.

When anchoring the lighting fixture to the ceiling, secure it in accordance with safety and local standards, taking into account the weight of the light fixture and the material of the ceiling. Threaded rods, wall plugs and screws, along with other fixings, are not included in the package.

For installation on sloped ceilings refer to multiple canopy installation in the sloped ceiling manual.

IT IS RECOMMENDED
TO INSTALL PENDANT LUMINAIRES
WITH MORE THAN ONE PERSON.

1

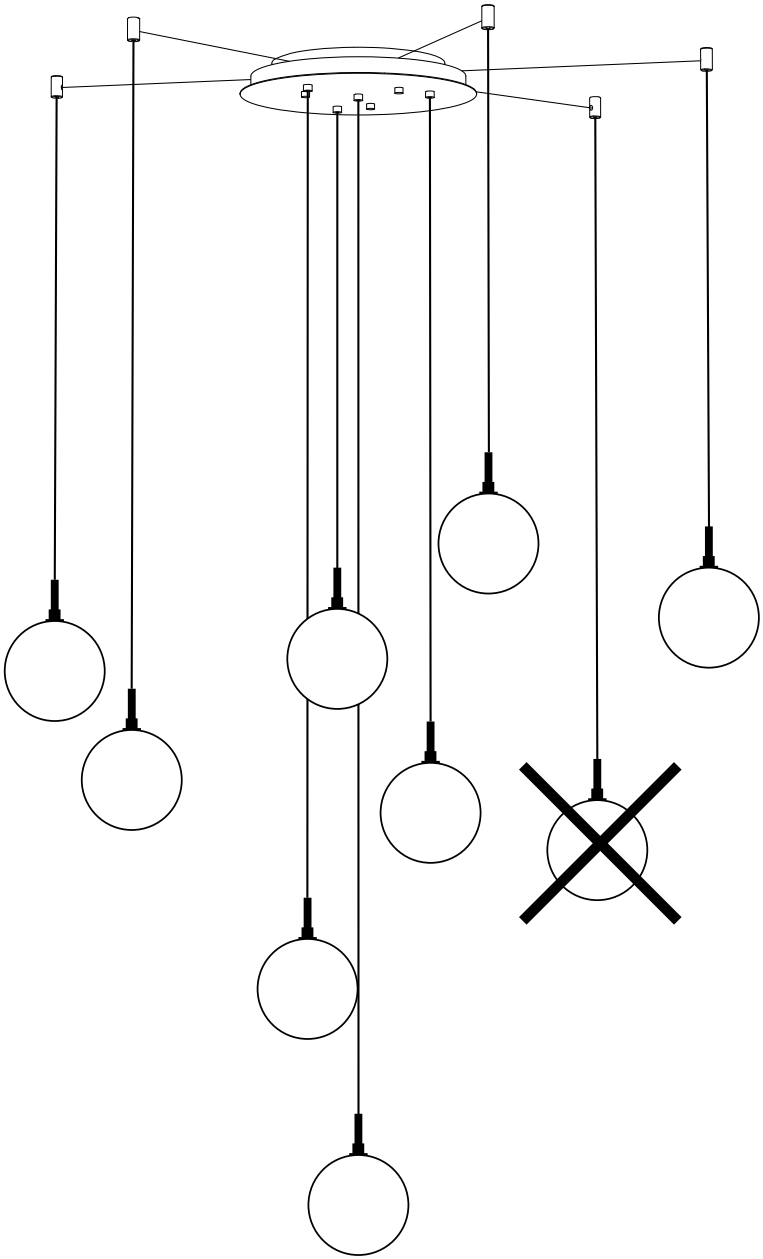

ALWAYS INSTALL THE LUMINAIRE WITHOUT THE GLASS SHADES ATTACHED!

2

Measure and mark the length of the **power cable** from the mounting (6) to the grommet (14).

See the table of cable lengths.
If you need to shorten the power cable, see page 18.

CLICK HERE
TO SHORTEN THE POWER CABLE

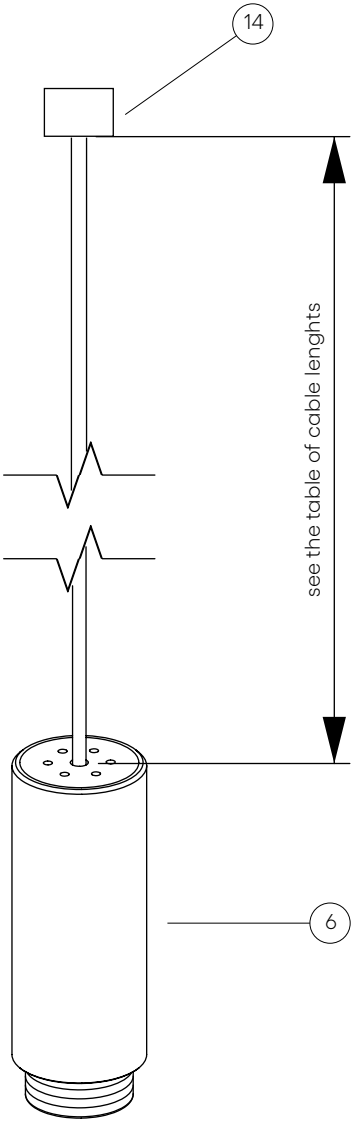

3

If installing the **pyrite** collection, thread the metal sheet top onto the cable now.

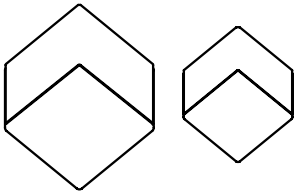

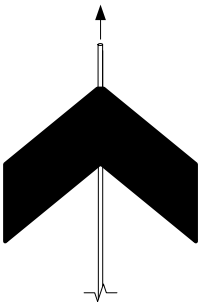

If installing the **fragments** collection, thread the sheet metal cover onto the cable now.

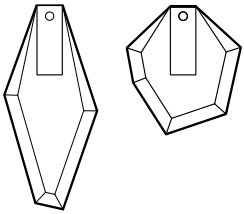



If installing the **stellar dust** collection with **crystal bead**, thread the crystal bead onto the cable now.

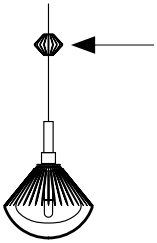

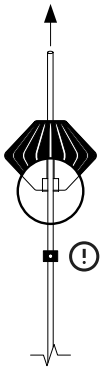

4

Remove the three screws and remove
the canopy cover from the anchor plate.

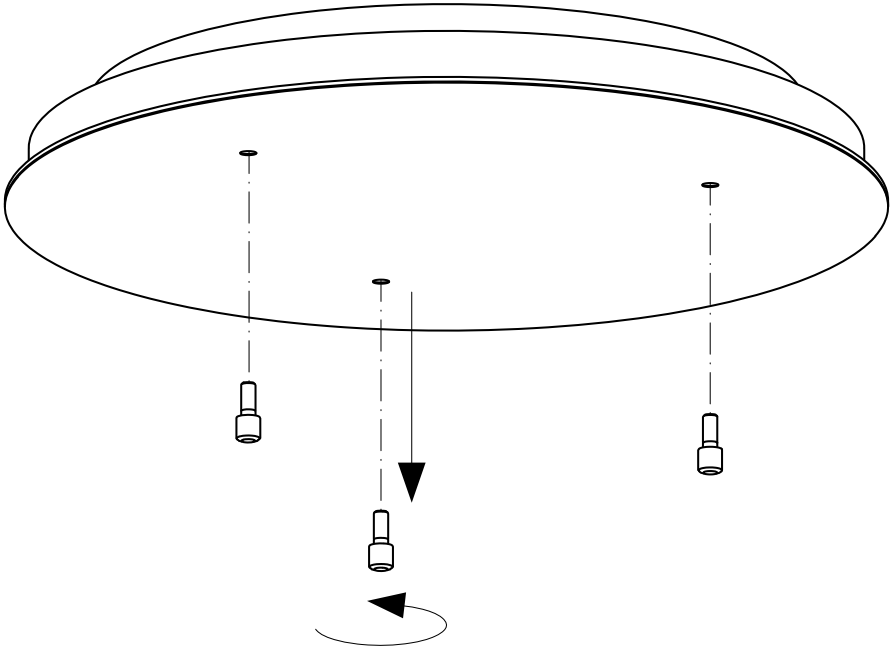

5

For easier handling, disconnect the canopy from the anchor plate using the snap-hooks.

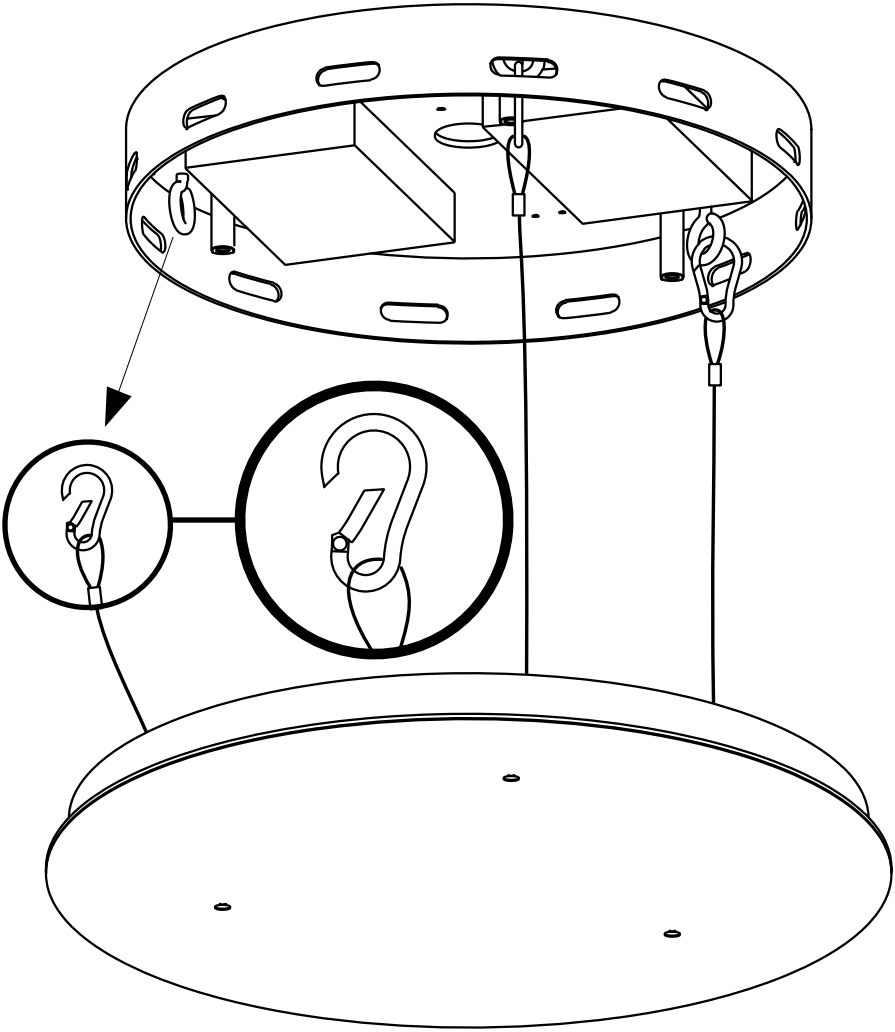

6

Mark the anchor points on the ceiling. See the table of cable lengths and the RCP plan 1:1. We recommend printing this plan, placing it on the floor, and using a laser to project the points onto the ceiling.

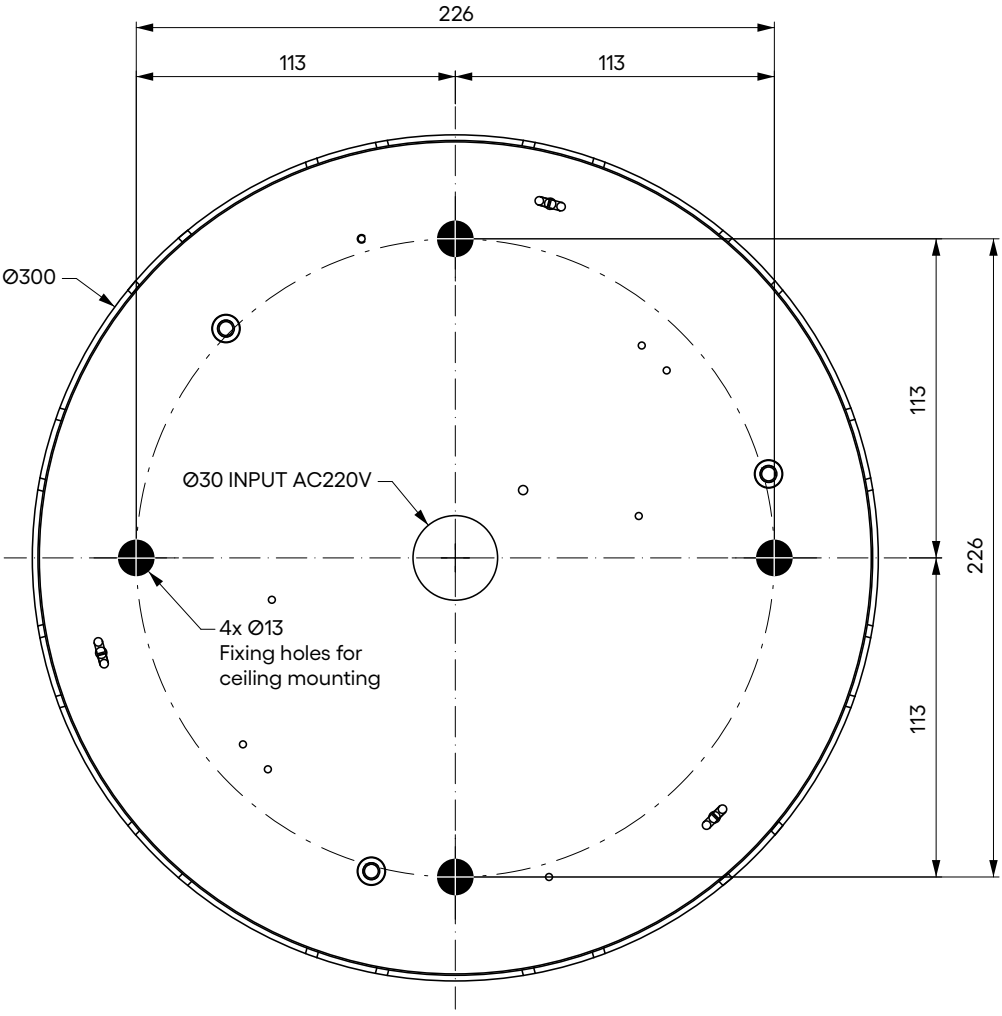

DOWNLOAD ANCHOR PLATE DRAWING 1:1

7

Thread the anchor plate onto the supply conductor from the ceiling and secure it in accordance with safety and local standards, taking into account the weight of the light fixture and the material of the ceiling (threaded rods, wall plugs and screws, other fixings - not included in the package). Bomma bears no responsibility for the chosen solution or its implementation.

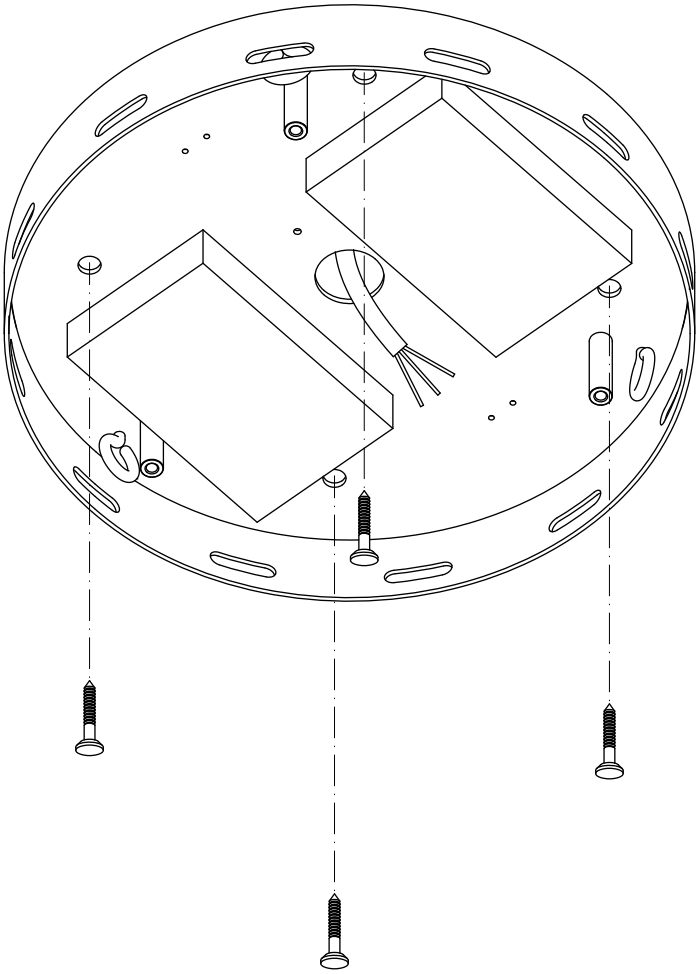

8

Reconnect the canopy to the anchor plate using the snap-hooks.

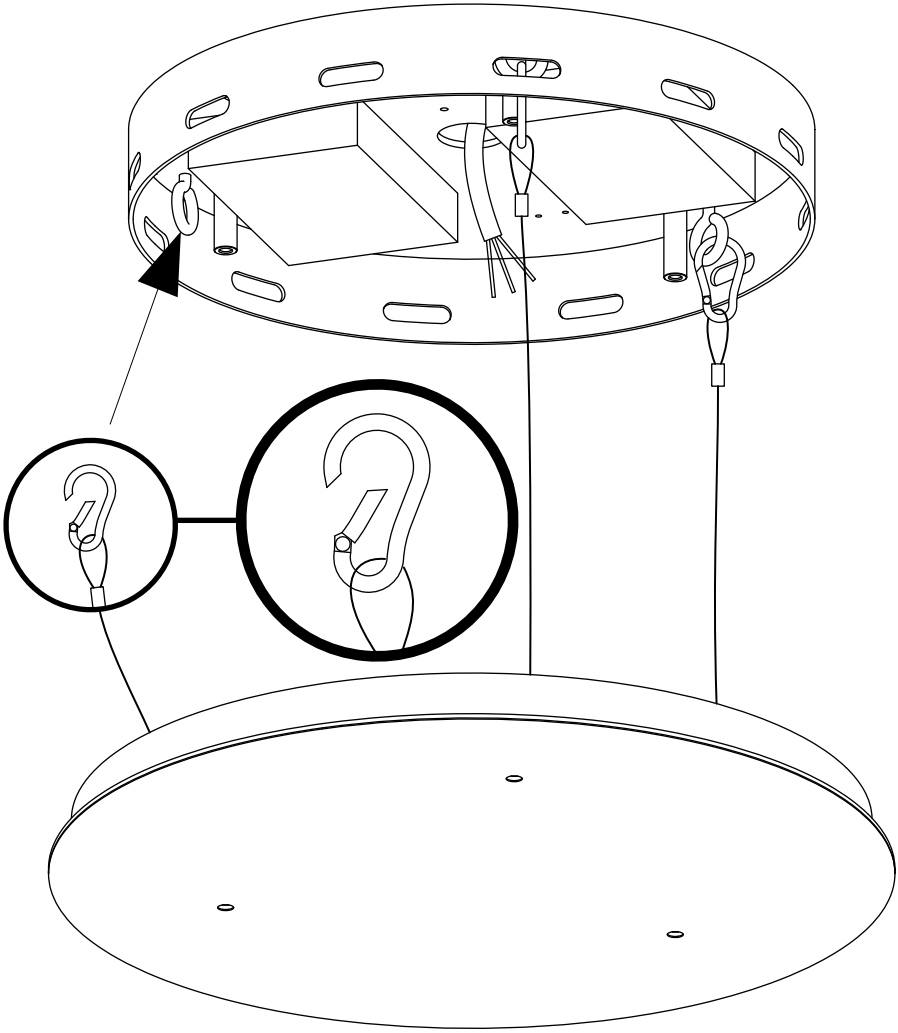

9

If the cables do not exit the canopy cover, continue with step 10.

Thread the ends of the **power cable** through the grommets in the canopy (picture A).

Slide the clamping insert into the grommet (picture B) and tighten the screw so that it does not point into the groove in the clamping insert (picture C).

After that, thread the plastic lock (picture D) onto the cable. Place it 20 cm from the grommet. This allows you to fine-tune the height of the pendant if necessary.

Finally, gently pull the cable to make sure it is properly fixed in the grommet.

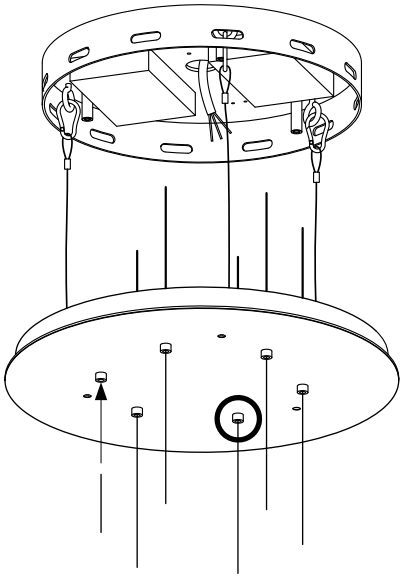

PICTURE B

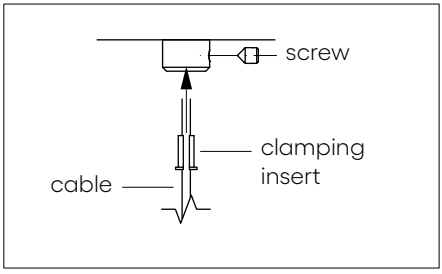

PICTURE A

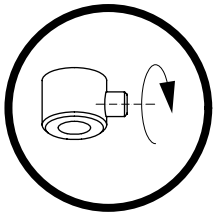

* Illustrated on Grommet Type 2.
For other types, contact your sales representative.

PICTURE C

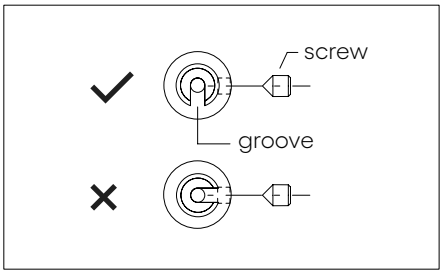

PICTURE D

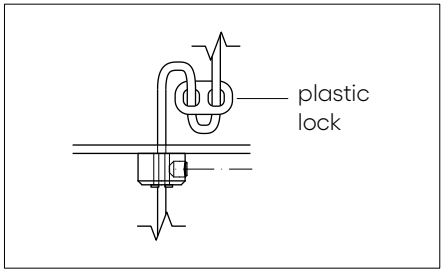

10 CABLE HANGERS

Mark the points on the ceiling where the cable hangers will be, according to the relevant RCP plan.

At these points, screw the self-tapping screws (which are included in the package) into the ceiling so that the M6 thread faces outwards.

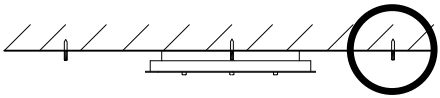

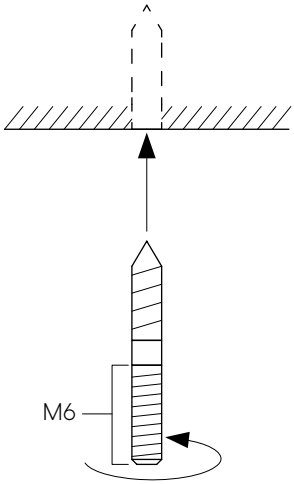

Screw the cable hanger (1) onto the thread. The side hole for the cable outlet must point toward the canopy after tightening.

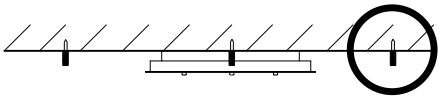

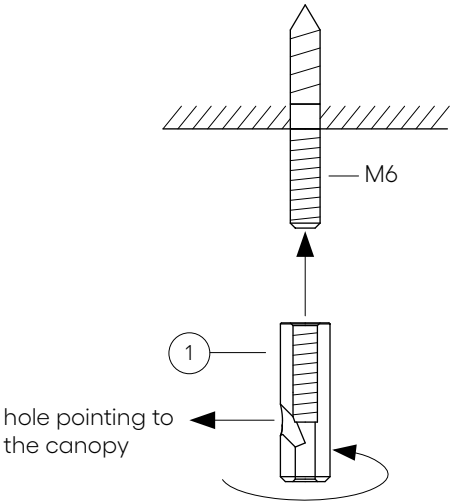

11

Thread the end of the **power cable** through the cable hanger. Then lead the cable along the ceiling to the grommet on the side of the anchor plate. In front of the grommet, place a clamp on the cable at the marked point (Picture A). Slide the clamping insert into the grommet (Picture B) and tighten the screw so that it does not point into the groove in the clamping insert (Picture C). After that, thread the plastic lock (Picture D) onto the cable. Finally, gently pull the cable to make sure it is properly fixed in the grommet.

PICTURE A

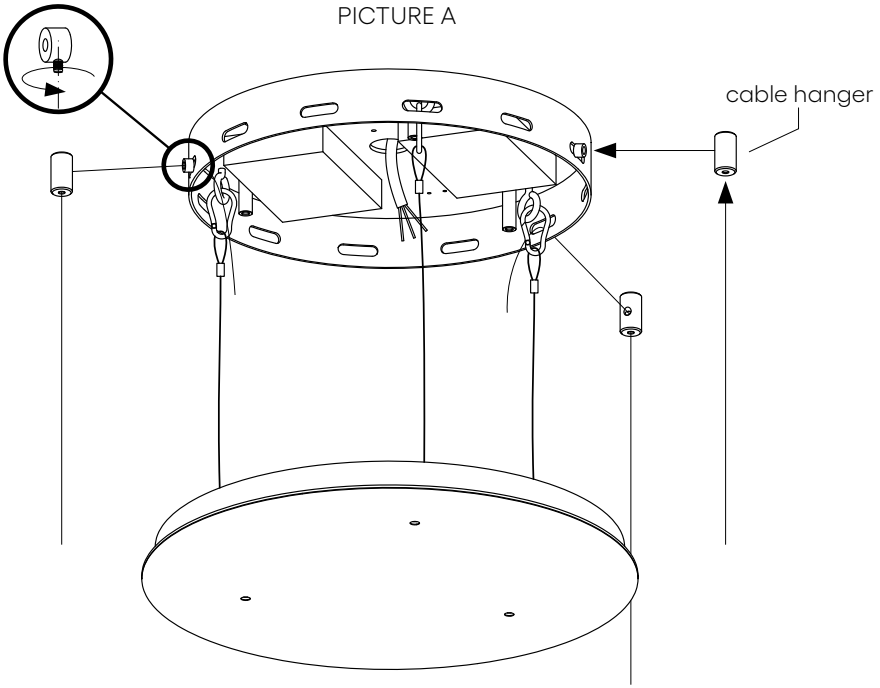

PICTURE B

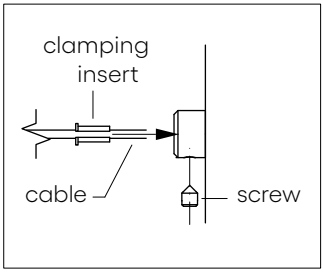

PICTURE C

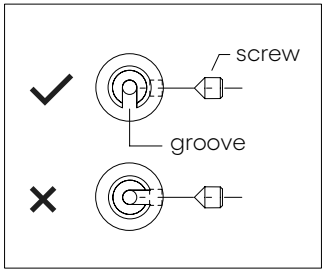

PICTURE D

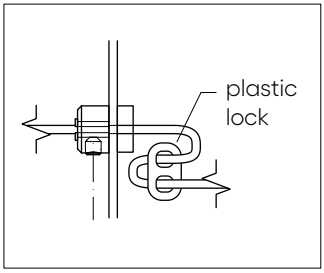

Power cables must pass through the grommets installed in the slots of the anchor plate. The position of the grommets determines the cable routing direction towards the cable hanger. To achieve the desired composition, reposition the grommets in different slots as needed. Each slot can accommodate up to two grommets.

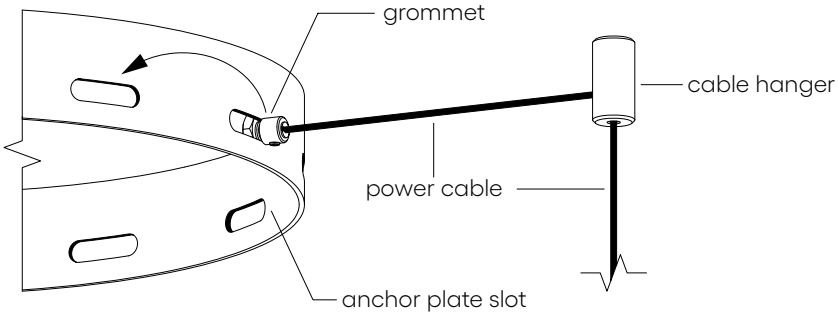

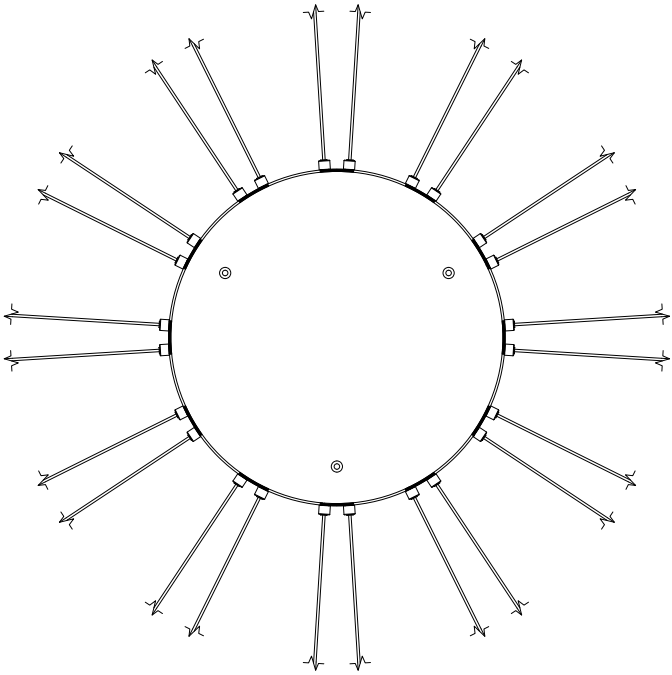

Maximum configuration — 24 luminaires (bottom view)

12

Lift the canopy cover and reattach it to the anchor plate with the three screws.

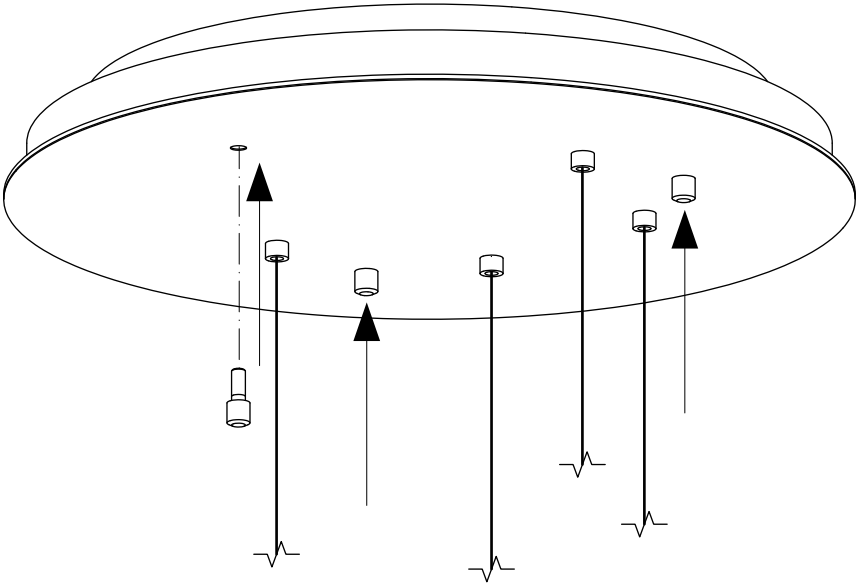

13

Finally, attach the glass shades.

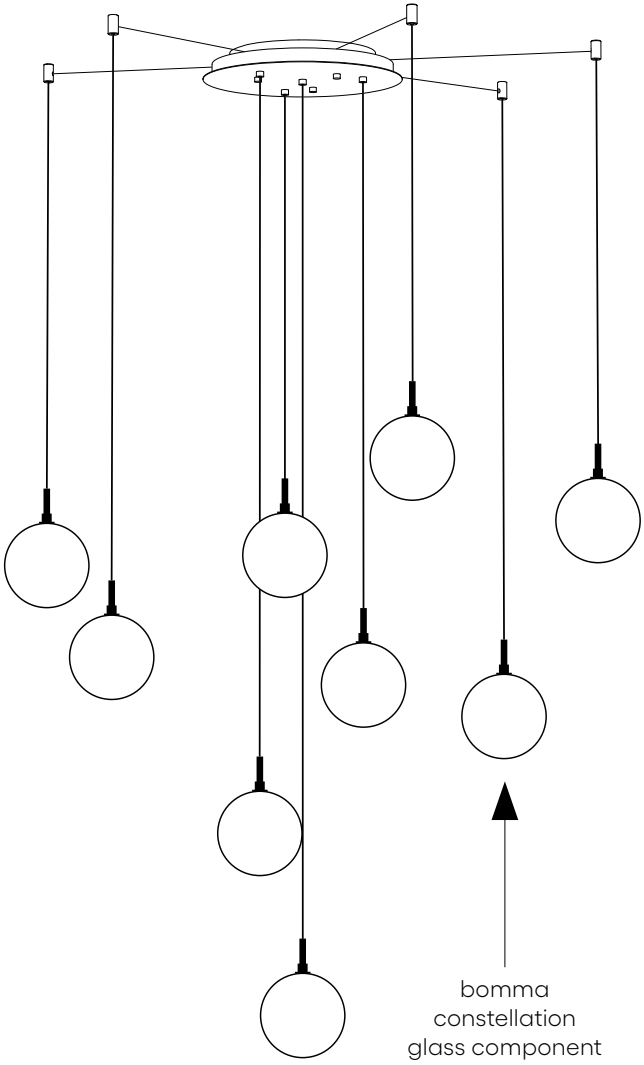

Congratulations!

You may now reconnect the power and turn the light on.

When dismantling, first turn OFF the light and disconnect it from the power supply. Then follow the above steps in reverse order.

Use the original or similar packaging for any later transport of the light fixture to prevent damage.

HOW TO SHORTEN THE POWER CABLE

Shorten the cable to the required length of the lamp suspension and insulate its end as shown.

Cable (+) and wire braid (-) serve as conductors for the electrical installation.

CLICK HERE TO WATCH THE INSTRUCTIONAL VIDEO

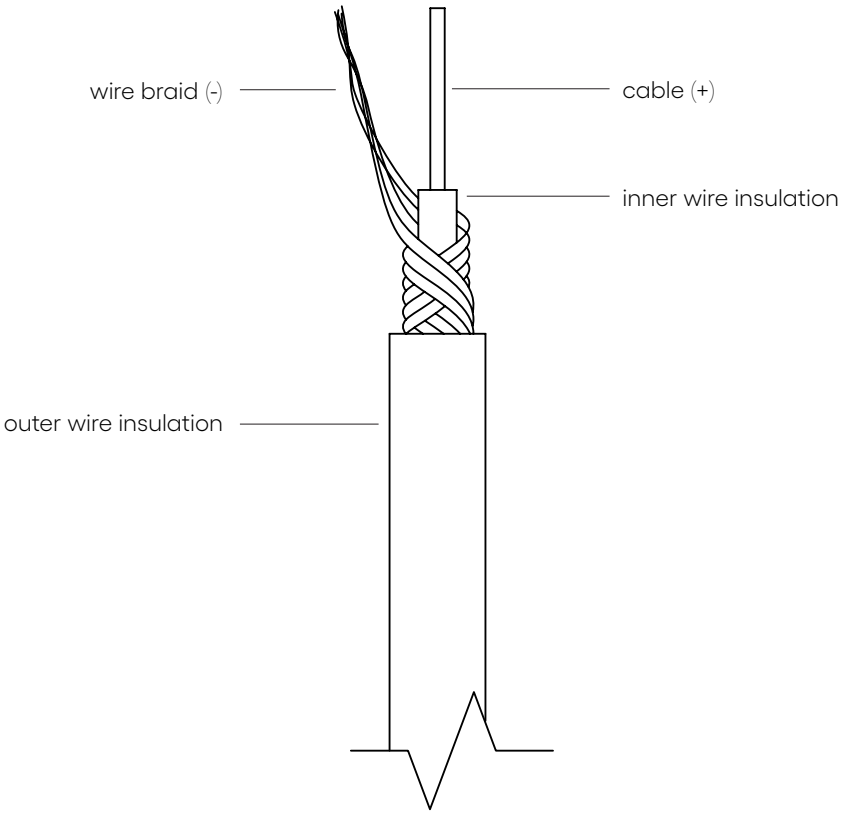

Disposal

At the end of the product's service life, dispose of it in accordance with legal regulations for environmental protection and public health and safety.

Waste Materials Catalogue

Number	Category	Name
10 11 11*	N	Waste glass
		in small particles
		and glass powder
		containing heavy metals
10 11 12	O	Waste glass other than those
		mentioned in 10 11 11
17 04 01	O	Copper, bronze, brass
17 04 05	O	Iron and steel
20 01 01	O	Paper and cardboard
15 01 05	O	Composite packaging

Contact

BMRC GROUP s.r.o.
Pod dráhou 1638/7, Holešovice,
170 00 Praha 7
Czech Republic
+420 569 453 149
info@bomma.cz
www.bomma.cz

Instagram bomma_cz
Facebook bommacz

bomma.cz

drawn by	approved by	revision	date	signature
Jan Majer	Petr Novotný	1	07. 2026	

Control

Date of packaging

step beyond