Fragments bomma





Fragments boomma









Fragments Inspiration

From Waste to Original Gemstones

The first lighting collection using Fragmentglass. A new glass material by BOMMA that upcycles shards of glass from previous production to give them new life. The new lighting carries BOMMA’s signature combination of innovation, craft, technology and distinctive design. The shapes resemble gemstones created under pressure to reveal inner beauty.

Design by DECHEM Studio

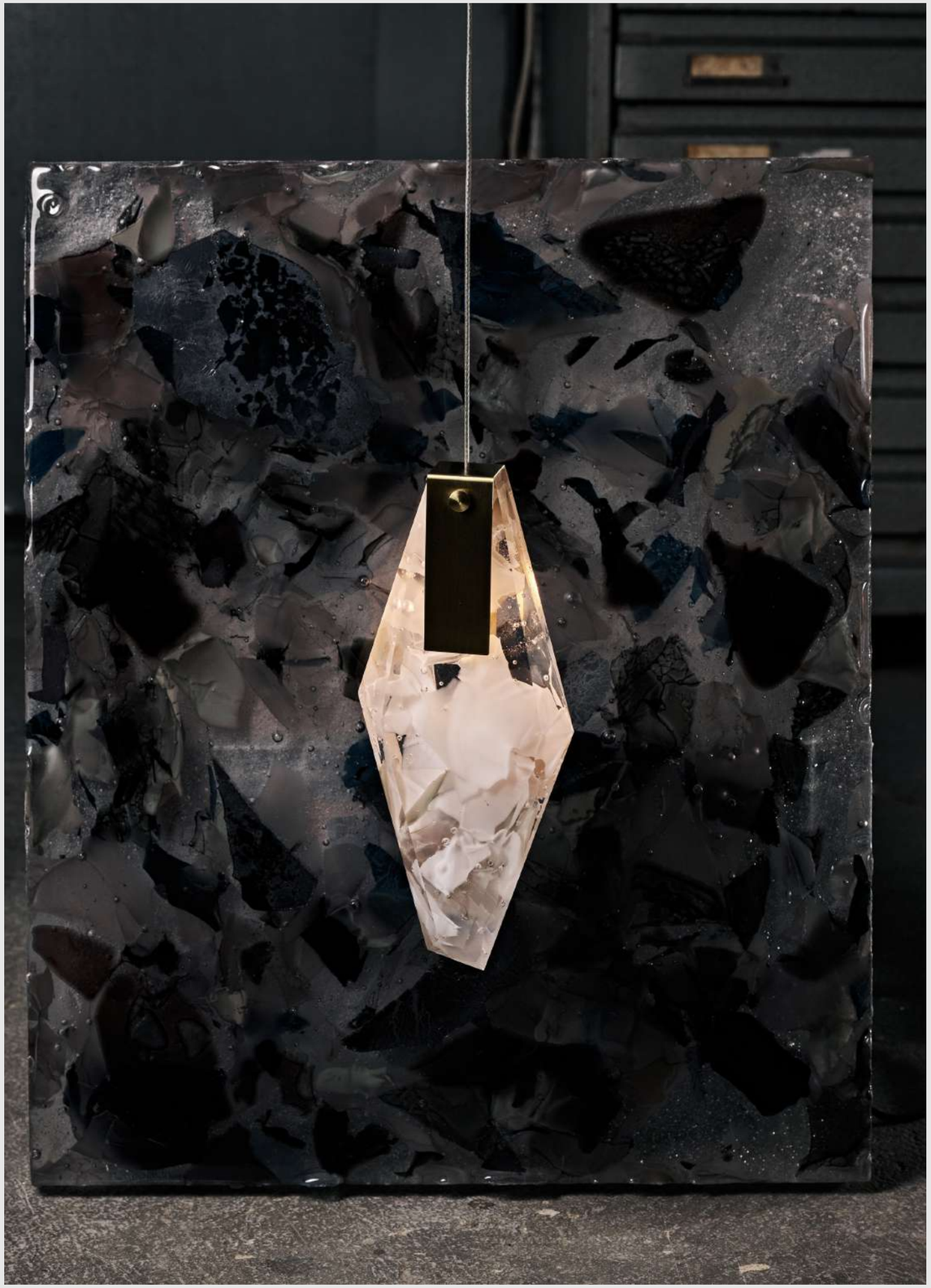

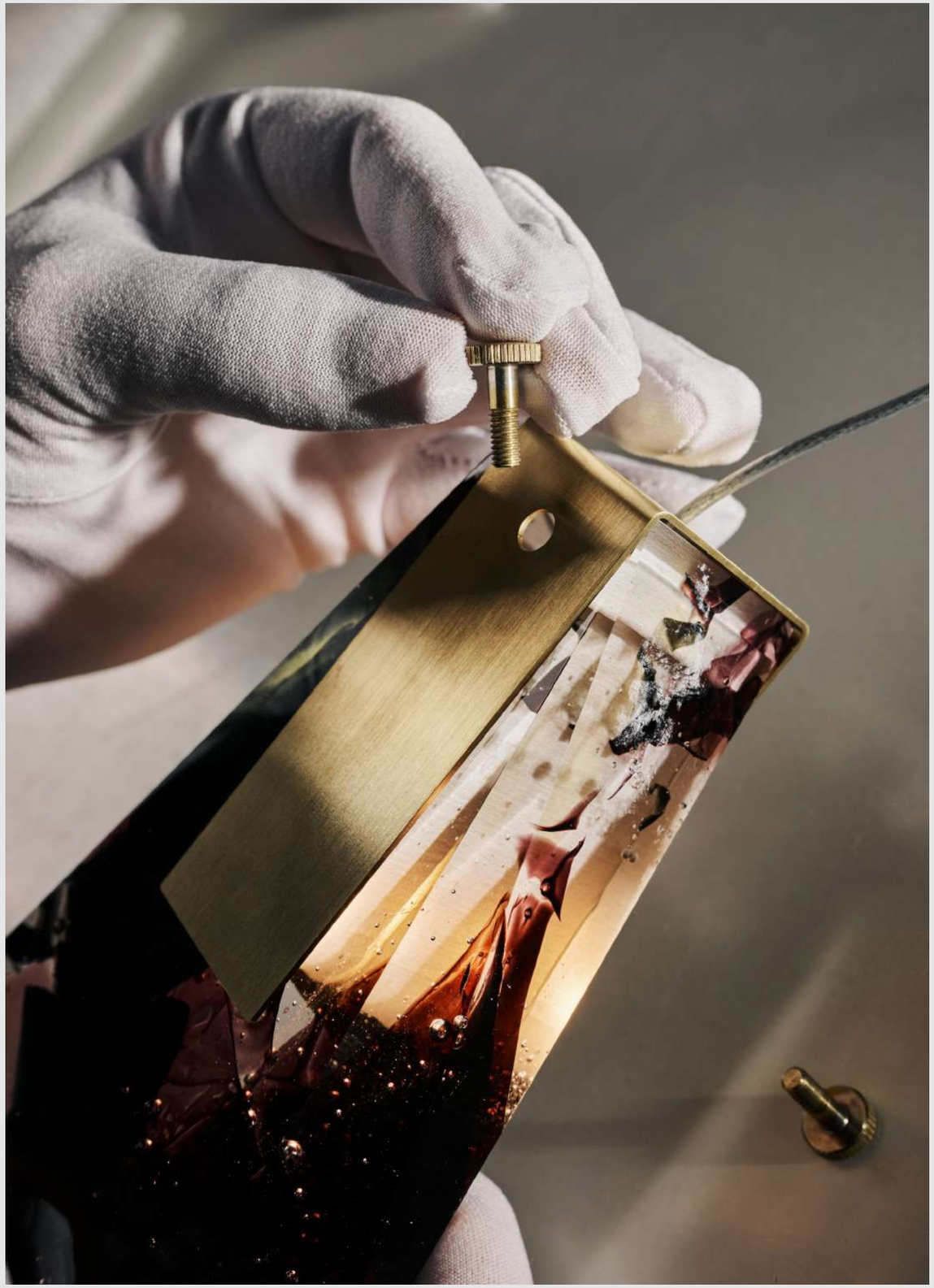

Fragments boomma

The glassmakers then pull the piece to a desired length, stretching the fragments across the interior of the glass rod

Fragments Production

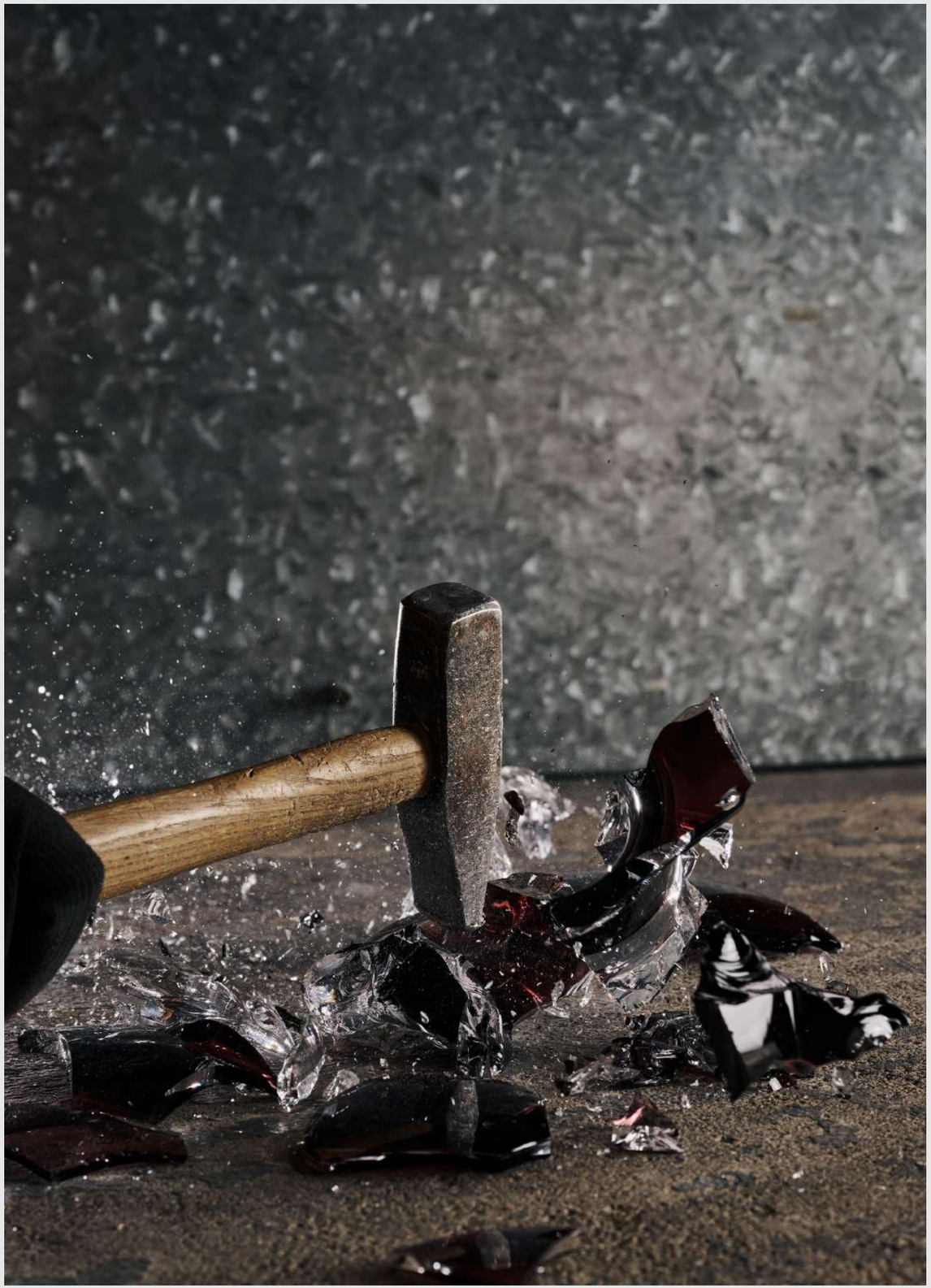



Fragments bomma

Fragmentglass is a new material that upcycles glass shards that failed to pass strict quality control of BOMMA‘s crystal lighting.





Fragments boomma

Each Fragmentglass panel is carefully assembled by stacking glass shards into a melting mold.





The designers carefully curated a color palette, allowing only certain ratios of colored shards to achieve the desired effect.





Fragments boomma

Each piece is first cut from the Fragmentglass panel and then meticulously hand-cut by the master glass cutter.

Fragments Projects



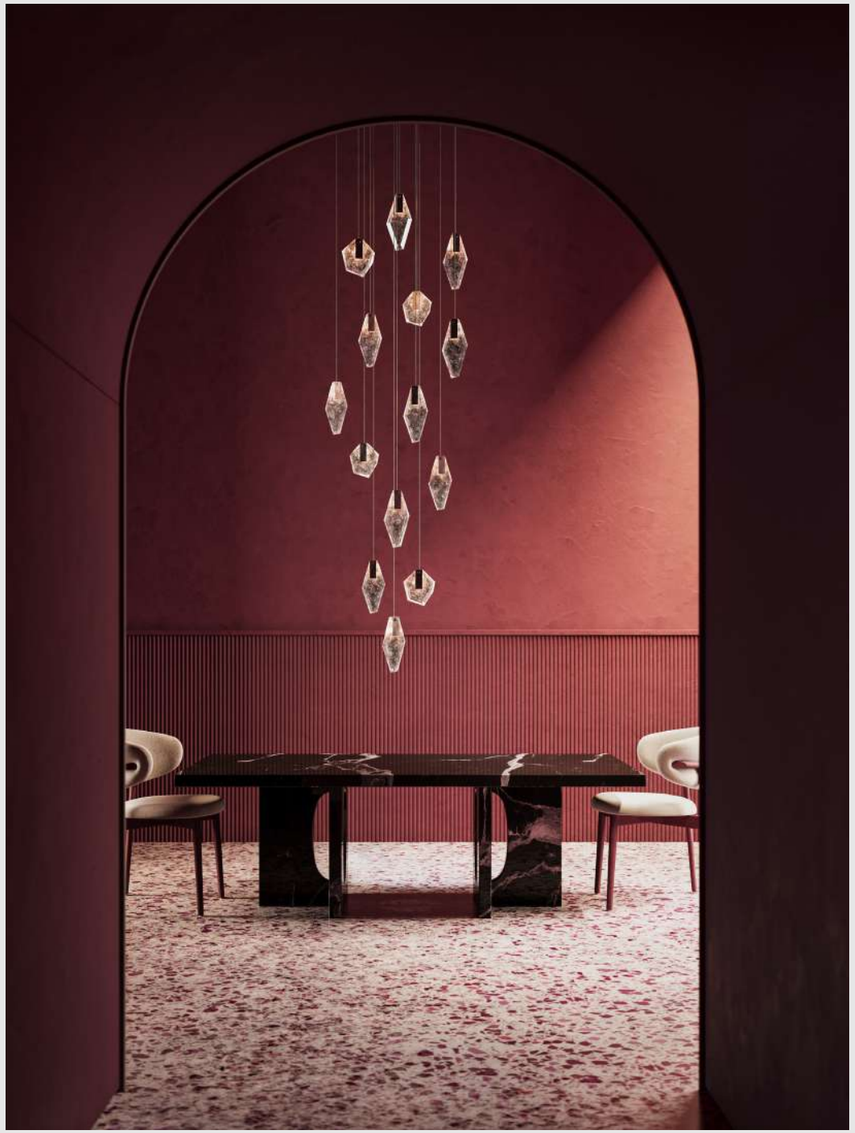

Fragments bomma Euroluce 2025, Italy, Milan, Interior by Studio Salaris and Václav Mlynář

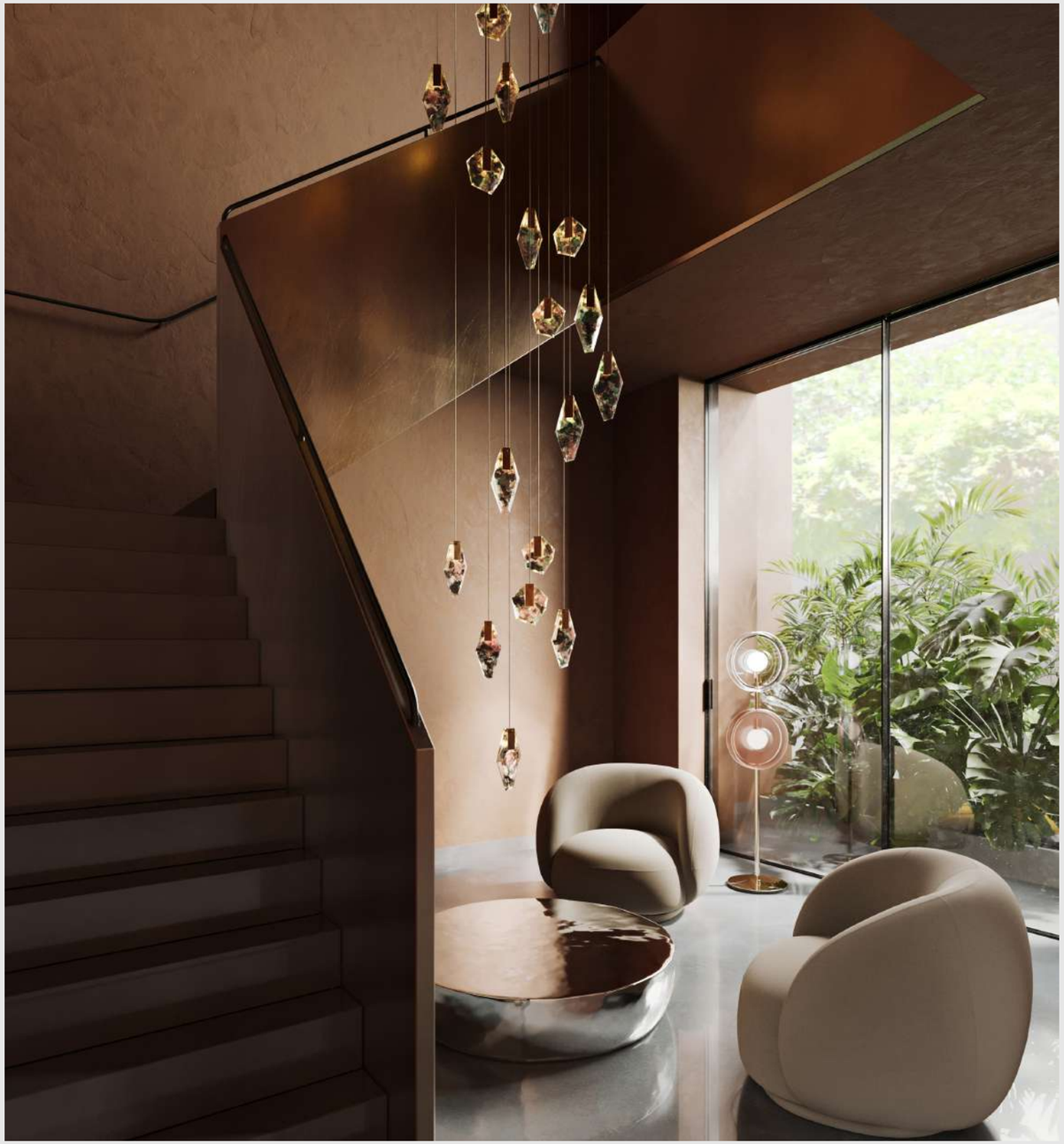



Fragments boomma



Fragments boomma



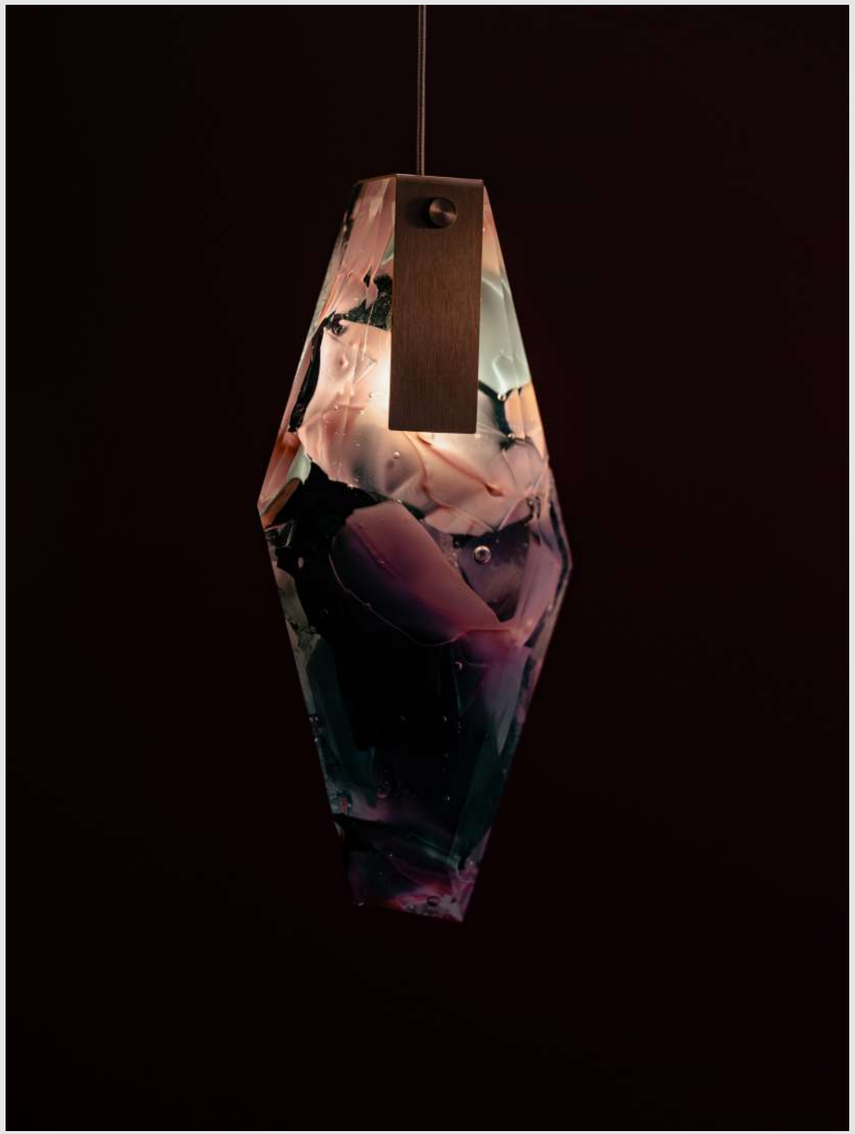

Fragments boomma





Fragments boomma





Fragments boomma



Fragments boomma

Fragments Options

Options

Single Pendant Long

Glass options
black
flamingo mint
white

Fitting options
brushed gold
anthracite
brushed bronze



Black / Brushed gold

Flamingo mint / Anthracite

White / Brushed bronze

Options

Single Pendant Short

Glass options
black
flamingo mint
white

Fitting options
brushed gold
anthracite
brushed bronze



Black / Brushed gold



Flamingo mint / Anthracite



White / Brushed bronze

Options

Single Pendant Short

Glass options
black
flamingo mint
white

Fitting options
brushed gold
brushed silver



Black / Brushed gold



Flamingo mint / Brushed silver



White / Brushed gold

Options

Single Pendant Short

Glass options
black
flamingo mint
white

Fitting options
brushed gold
brushed silver



Black / Brushed gold



Flamingo mint / Brushed silver



White / Brushed gold

Fragments
Technical Information

FRAGMENTS
pendant long

Design by
Dechem Studio

Handmade glass attributes

Each Fragmentglass panel is uniquely crafted by stacking glass shards in a melting mould. This process introduces natural elements like bubbles and iron traces, which enhance the panel's aesthetic. While designers control the colour, shard size, and format, the final appearance may vary due to the unpredictable melting process. These variations are intentional and add to the panel's uniqueness.

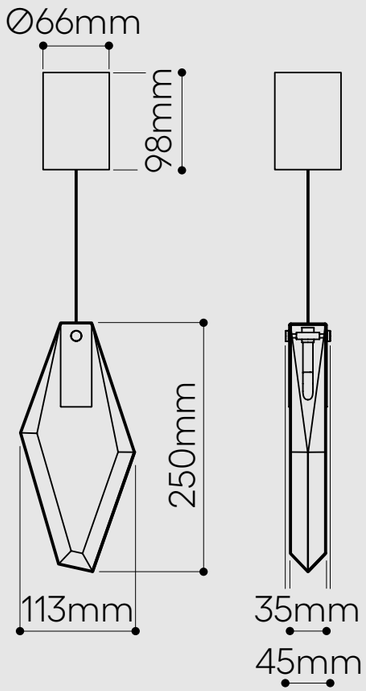

Fragments bomma

LIGHTING DESCRIPTION	
Size	113 x 45 mm, H 250 mm 4,4 x 1,8 inch, H 9,8 inch
Cable	transparent 2,5 m / 98,4 inch
Weight	+- 1,5 kg / 3,3 lb
Glass	Fragmentglass in black, white and flamingo mint color
Mounting	brushed gold (brushed brass) anthracite (brass and galvanized black nickel)
Protection	IP 20
Nominal voltage	220-240V A.C. 50 hz (EU) 110-120 V A.C. 60 Hz (USA)
Class	III. EU / II. USA

LIGHT SOURCE	
Type	G4, 1,2W LED, 100 lm
Base	G4 (EU) / G4 (USA)
Voltage	12V, AC
Temperature	2700 K
Color index	RA 90+
Dimming	EU/Other versions - dimmable in constellations, non dimmable as a single pendant. UL/The Americas - dimmable in constellations and as a single pendant.

TRANSFORMER	
Primary	100-240V, 50/60 Hz, 0,04A
Dimmer	DC 700mA (0,5V–4V) 1×3W

PACKAGING	
Material	Cardboard
Size	392 × 392 × 120 mm 15,4 × 15,4 × 4,7 inch

Origin: traditionally produced in the Czech Republic
Intellectual property license holder: Bomma Czech Republic (EU)
Represented by BMRC group s.r.o.

CERTIFICATES

FRAGMENTS
pendant short

Design by
Dechem Studio

Handmade glass attributes

Each Fragmentglass panel is uniquely crafted by stacking glass shards in a melting mould. This process introduces natural elements like bubbles and iron traces, which enhance the panel's aesthetic. While designers control the colour, shard size, and format, the final appearance may vary due to the unpredictable melting process. These variations are intentional and add to the panel's uniqueness.

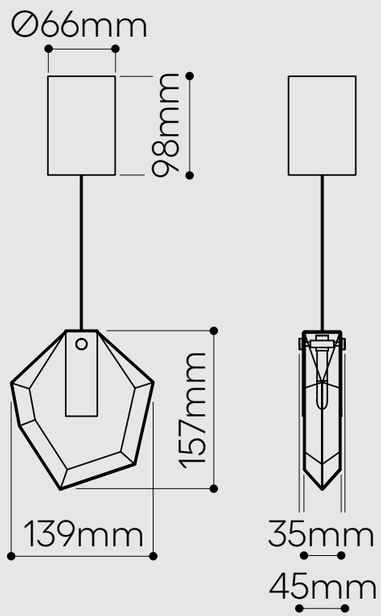

Fragments bomma

LIGHTING DESCRIPTION	
Size	139 x 45 mm, H 157 mm 5,5 x 1,8 inch, H 6,2 inch
Cable	transparent 2,5 m / 98,4 inch
Weight	+- 1,2 kg / 2,6 lb
Glass	Fragmentglass in black, white and flamingo mint color
Mounting	brushed gold (brushed brass) anthracite (brass and galvanized black nickel)
Protection	IP 20
Nominal voltage	220-240V A.C. 50 hz (EU) 110-120 V A.C. 60 Hz (USA)
Class	III. EU / II. USA

LIGHT SOURCE	
Type	G4, 1,2W LED, 100 lm
Base	G4 (EU) / G4 (USA)
Voltage	12V, AC
Temperature	2700 K
Color index	RA 90+
Dimming	EU/Other versions - dimmable in constellations, non dimmable as a single pendant. UL/The Americas - dimmable in constellations and as a single pendant.

TRANSFORMER	
Primary	100-240V, 50/60 Hz, 0,04A
Dimmer	DC 700mA (0,5V–4V) 1×3W

PACKAGING	
Material	Cardboard
Size	392 × 392 × 120 mm 15,4 × 15,4 × 4,7 inch

Origin: traditionally produced in the Czech Republic
Intellectual property license holder: Bomma Czech Republic (EU)
Represented by BMRC group s.r.o.

CERTIFICATES

FRAGMENTS
wall short

Design by
Dechem Studio

Handmade glass attributes

Each Fragmentglass panel is uniquely crafted by stacking glass shards in a melting mould. This process introduces natural elements like bubbles and iron traces, which enhance the panel's aesthetic. While designers control the colour, shard size, and format, the final appearance may vary due to the unpredictable melting process. These variations are intentional and add to the panel's uniqueness.

option A

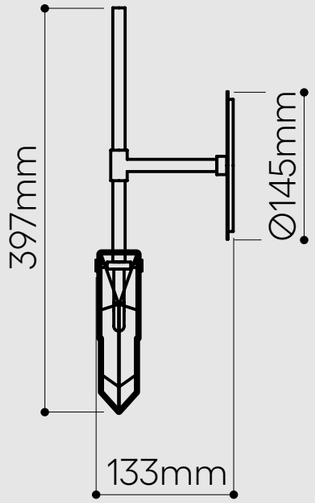

option B

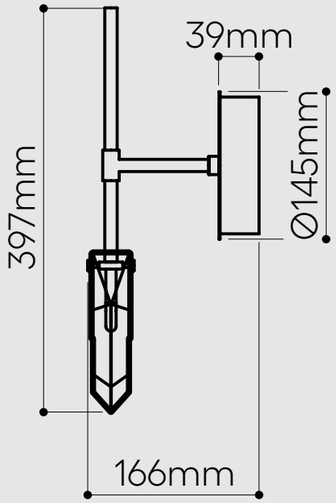

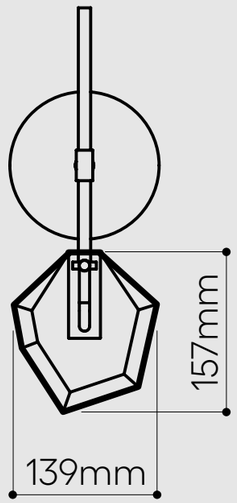

Fragments bomma

LIGHTING DESCRIPTION	
Size	145 × 133 (166) × 397 mm 5,7 × 5,2 (6,5) × 15,6 inch
Weight	+- 1,9 kg / 4,2 lb
Glass	Fragmentglass in black, white and flamingo mint color
Mounting	brushed silver (brushed stainless steel) brushed gold (brushed stainless steel gold nitridated)
Recommended junction box	EU - A.UK1-SH (72mm dia, 60mm min. depth) UL/The Americas - electrical box, Octagon, 4 X 4 inch (1,4 inch min. depth)
Protection	IP 20
Nominal voltage	220-240V A.C. 50 hz (EU) 110-120 V A.C. 60 Hz (USA)
Class	II. EU / I. USA

LIGHT SOURCE	
Type	G4, 1,2W LED, 100 lm
Base	G4 (EU) / G4 (USA)
Voltage	12VDC, 100mA
Temperature	2700 K
Color index	RA 90+
Dimming	EU/Other versions - non-dimmable UL/The Americas - TRIAC, ELV

TRANSFORMER	
Primary	100-240V, 50/60 Hz
Dimmer	12VDC, +-0,5A, 5W

PACKAGING	
Material	Cardboard
Size	220 × 220 × 250 mm 8,6 × 8,6 × 9,8 inch

Origin: traditionally produced in the Czech Republic
Intellectual property license holder: Bomma Czech Republic (EU)
Represented by BMRC group s.r.o.

CERTIFICATES

step beyond

BOMMA BMRC Group s.r.o. Pod dráhou 1638/7 Prague 7, 170 00 Czech Republic info@bomma.cz