
Flare bomma





Flare bomma



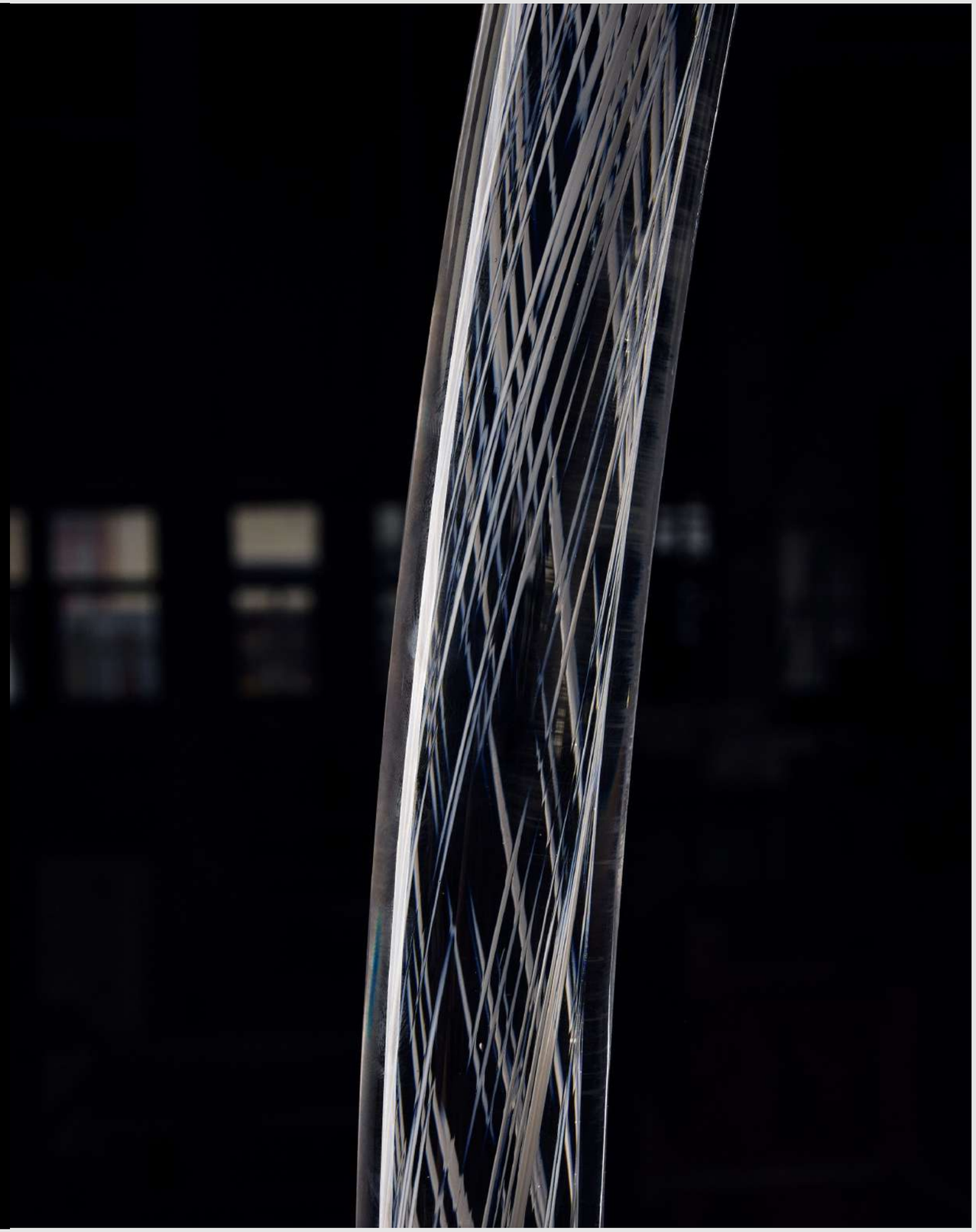

Flare boomma

Flare Inspiration

A glimpse of inner ligh

The beam inside BOMMA's Flare lights its magical spiral structure inside the crystal rod. This collection, designed by Kateřina Handlová, pays homage to traditional glassmaking techniques and allows architects and designers to create distinctive lighting installations for diverse spaces.

Design by Kateřina Handlová



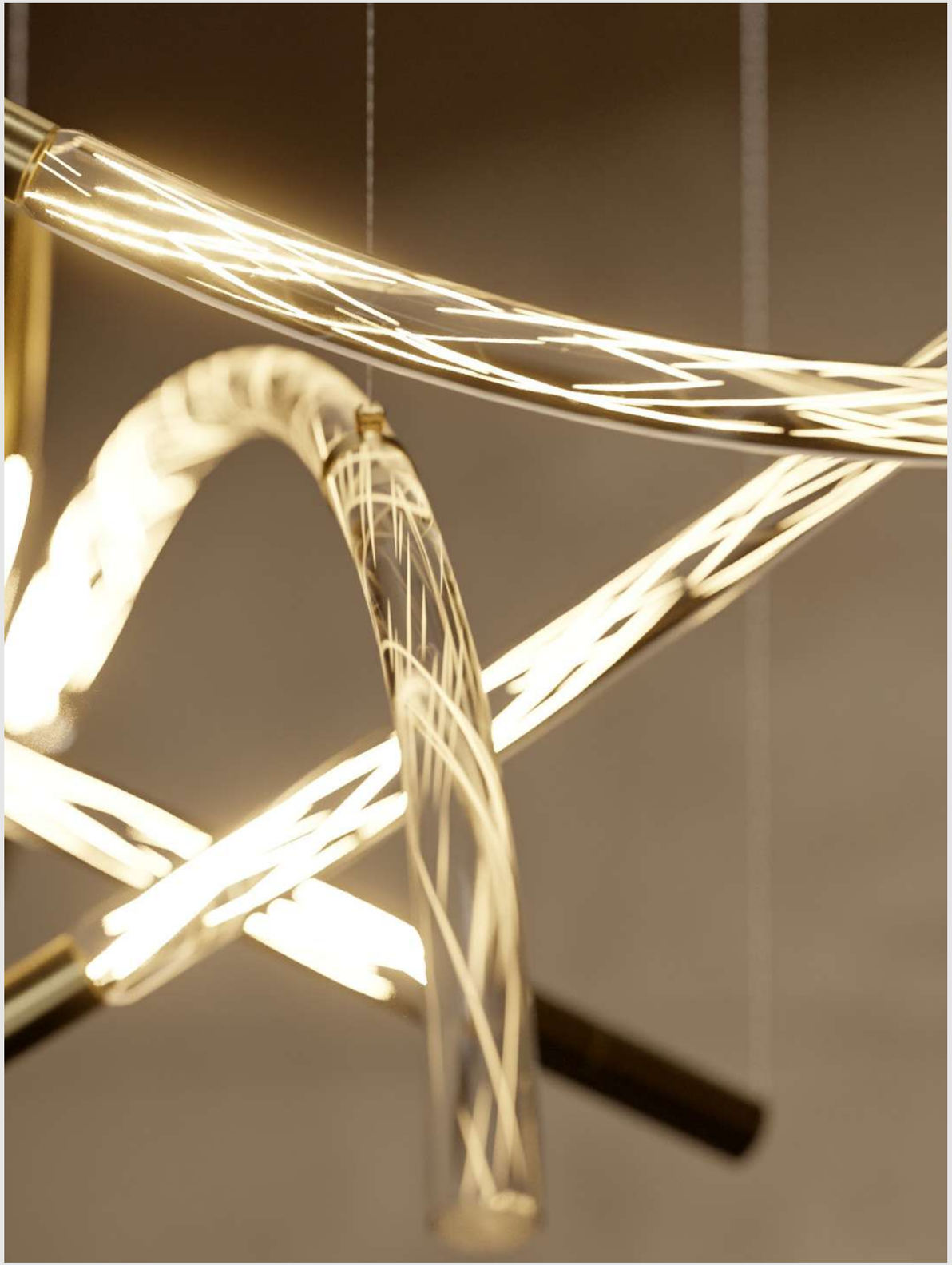

Flare bomma

Flare Production





Flare bomma

The molten-glass core is covered by small glass shards, then dipped back in molten crystal.





The glassmakers then pull the piece to a desired length, stretching the fragments across the interior of the glass rod





This creates a magical texture inside the rod, seemingly its own Universe, flaring every time a switch is flipped.



Flare Projects





Flare boomma





Flare bomma

Composition of 88 pcs of Flare Short pendants

Composition of 78 pcs of Flare Short pendants





Flare bomma Artistic Installation Sacred Enlightenment, St. Salvator Church, Czechia





Flare bomma

Restaurace Brasiliero, Praha



Flare boomma





Flare boomma

Salone del mobile, Euroluce 2025, Italy, Milan, Interior by Studio Salaris and Václav Mlynář

Maison&Objet, Paris 2026, Interior by Studio Salaris and Václav Mlynář

Flare bomma Composition of 27 pcs of Flare Short Pendant





Flare boomma

Flare Options

Options

Single Pendant

Glass options
clear

Fitting options
brushed silver
brushed gold
brushed bronze

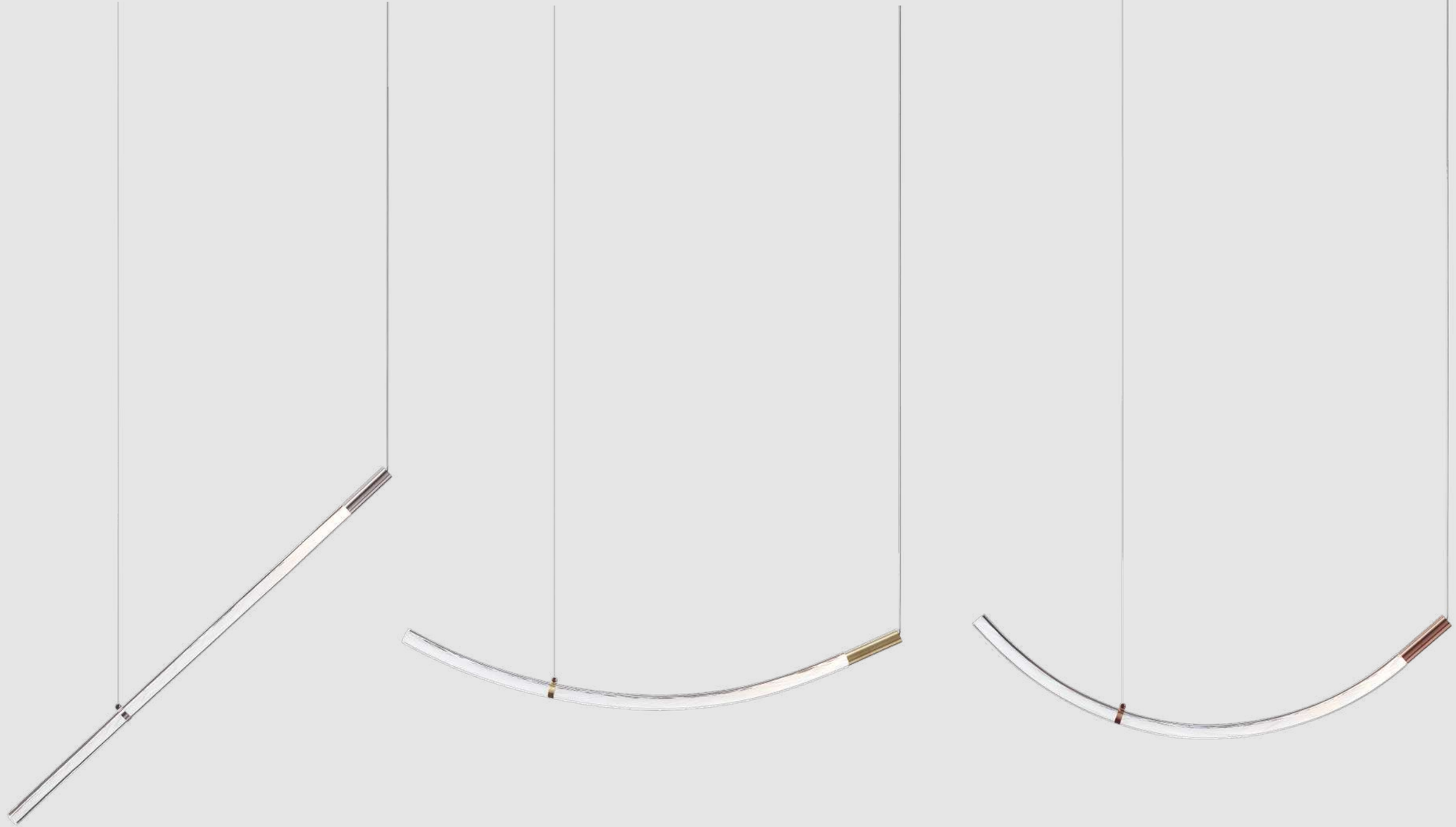

Clear / Brushed silver

Clear / Brushed gold

Clear / Brushed bronze

Options

Pendant Short
small

Glass options
clear

Fitting options
brushed silver
brushed gold
brushed bronze



Clear / Brushed silver

Clear / Brushed gold

Clear / Brushed bronze

Options

Pendant Short
medium

Glass options
clear

Fitting options
brushed silver
brushed gold
brushed bronze



Clear / Brushed silver

Clear / Brushed gold

Clear / Brushed bronze

Options

Pendant Short
large

Glass options
clear

Fitting options
brushed silver
brushed gold
brushed bronze



Clear / Brushed silver

Clear / Brushed gold

Clear / Brushed bronze

Flare Technical Information

FLARE pendant A

Design by
Kateřina Handlová

Handmade glass attributes

All Bomma products are hand-made from lead-free crystal. Therefore any small bubbles, non-melts and irregularities in the glass are both proof and a characteristic feature of this traditional craft.

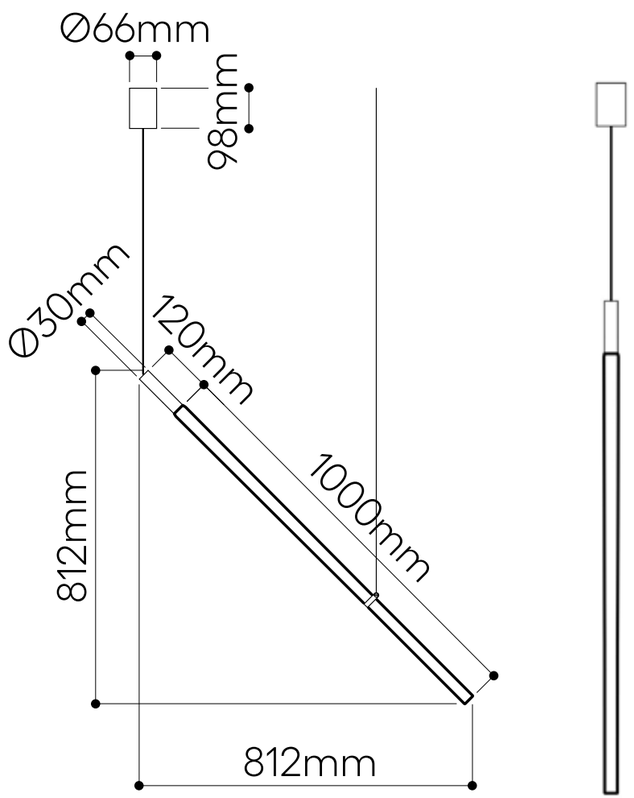

Flare bomma

LIGHTING DESCRIPTION

Size	1200 x 30 mm 44,09 x 1,18 inch
Cable	transparent 2,5 m / 98,4 inch
Weight	+- 2,5 kg / 5,5 lb
Glass	lead-free crystal with white spiral decor
Mounting	brushed gold (brushed stainless steel) brushed silver (brushed stainless steel) brushed bronze (brushed stainless steel)
Protection	IP 20
Nominal voltage	220-240V / A.C. 50–60 Hz (EU) 110-120 V / A.C. 60 Hz (USA)
Class	II. EU / I. USA

LIGHT SOURCE

Type	LED MCOB, 4 W (+-5%), 120 mA, 400 lm
Voltage	Vtyp 30-42V DC, Imax 150 mA
Temperature	2700 K
Color index	RA 90+
Dimming	Dimmable with TRIAC, PUSH, DALI

Origin: traditionally produced in the Czech Republic
Intellectual property license holder: Bomma Czech Republic (EU)
Represented by BMRC group s.r.o.

CERTIFICATES

FLARE pendant B

Design by
Kateřina Handlová

Handmade glass attributes

All Bomma products are hand-made from lead-free crystal. Therefore any small bubbles, non-melts and irregularities in the glass are both proof and a characteristic feature of this traditional craft.

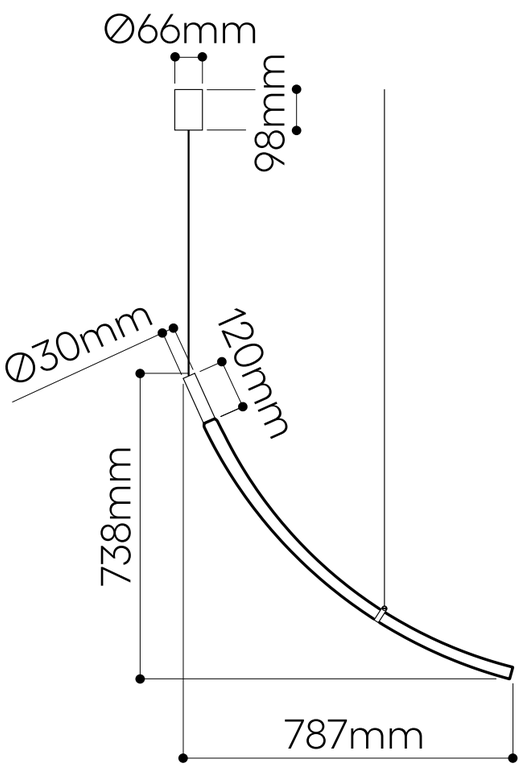

LIGHTING DESCRIPTION

Size	1066 x 30 mm 41,97 x 1,18 inch
Cable	transparent 2,5 m / 98,4 inch
Weight	+- 2,5 kg / 5,5 lb
Glass	lead-free crystal with white spiral decor
Mounting	brushed gold (brushed stainless steel) brushed silver (brushed stainless steel) brushed bronze (brushed stainless steel)
Protection	IP 20
Nominal voltage	220-240V / A.C. 50–60 Hz (EU) 110-120 V / A.C. 60 Hz (USA)
Class	II. EU / I. USA

LIGHT SOURCE

Type	LED MCOB, 4 W (+-5%), 120 mA, 400 lm
Voltage	Vtyp 30-42V DC, Imax 150 mA
Temperature	2700 K
Color index	RA 90+
Dimming	Dimmable with TRIAC, PUSH, DALI

Origin: traditionally produced in the Czech Republic
Intellectual property license holder: Bomma Czech Republic (EU)
Represented by BMRC group s.r.o.

CERTIFICATES

FLARE pendant C

Design by
Kateřina Handlová

Handmade glass attributes

All Bomma products are hand-made from lead-free crystal. Therefore any small bubbles, non-melts and irregularities in the glass are both proof and a characteristic feature of this traditional craft.

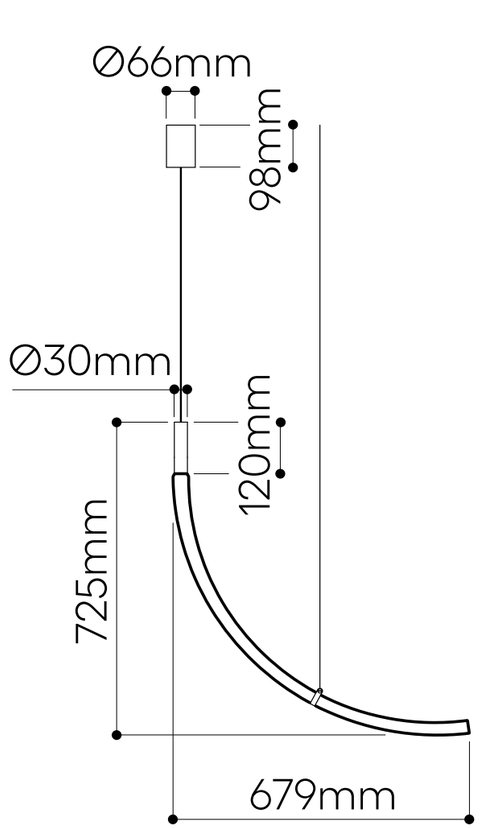

LIGHTING DESCRIPTION

Size	989 x 30 mm 38,94 x 1,18 inch
Cable	transparent 2,5 m / 98,4 inch
Weight	+- 2,5 kg / 5,5 lb
Glass	lead-free crystal with white spiral decor
Mounting	brushed gold (brushed stainless steel) brushed silver (brushed stainless steel) brushed bronze (brushed stainless steel)
Protection	IP 20
Nominal voltage	220-240V / A.C. 50–60 Hz (EU) 110-120 V / A.C. 60 Hz (USA)
Class	II. EU / I. USA

LIGHT SOURCE

Type	LED MCOB, 4 W (+-5%), 120 mA, 400 lm
Voltage	Vtyp 30-42V DC, Imax 150 mA
Temperature	2700 K
Color index	RA 90+
Dimming	Dimmable with TRIAC, PUSH, DALI

Origin: traditionally produced in the Czech Republic
Intellectual property license holder: Bomma Czech Republic (EU)
Represented by BMRC group s.r.o.

CERTIFICATES

FLARE pendant short

Design by
Kateřina Handlová

Handmade glass attributes

All Bomma products are hand-made from lead-free crystal. Therefore any small bubbles, non-melts and irregularities in the glass are both proof and a characteristic feature of this traditional craft.

LARGE

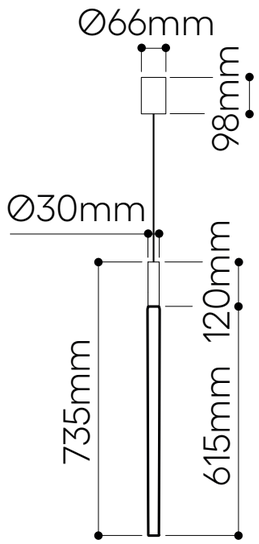

MEDIUM

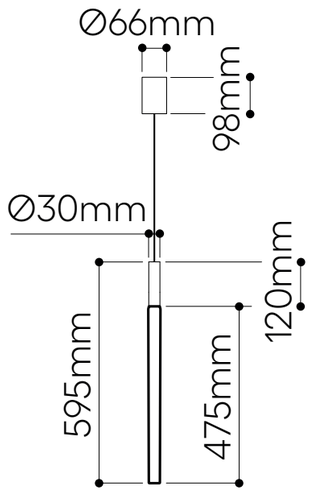

SMALL

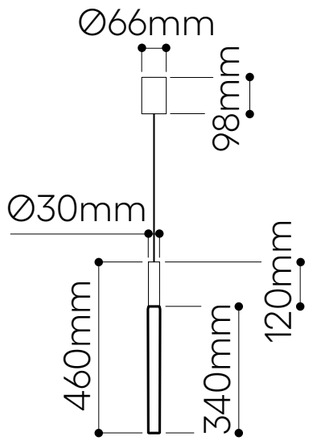

Flare bomma

LIGHTING DESCRIPTION

Size	S 460 x 30 mm 18.11 x 1.18 inch M 595 x 30 mm 23.43 x 1.18 inch L 735 x 30 mm 28.94 x 1.18 inch
Cable	transparent 2,5 m / 98,4 inch
Weight	Large (735 mm): ± 1,7 kg / 3.75 lb Medium (595 mm): ± 1,4 kg / 3.09 lb Small (460 mm): ± 1,1 kg / 2.43 lb
Glass	lead-free crystal with white spiral decor
Mounting	brushed gold (brushed stainless steel) brushed silver (brushed stainless steel) brushed bronze (brushed stainless steel)
Protection	IP 20
Nominal voltage	220-240V / A.C. 50–60 Hz (EU) 110-120 V / A.C. 60 Hz (USA)
Class	II. EU / I. USA

LIGHT SOURCE

Type	LED MCOB, 4 W (+-5%), 120 mA, 400 lm
Voltage	Vtyp 30-42V DC, Imax 150 mA
Temperature	2700 K
Color index	RA 90+
Dimming	Dimmable with TRIAC, PUSH, DALI

Origin: traditionally produced in the Czech Republic
Intellectual property license holder: Bomma Czech Republic (EU)
Represented by BMRC group s.r.o.

VERTICAL INSTALLATION ONLY.

CERTIFICATES

step beyond

BOMMA BMRC Group s.r.o. Pod dráhou 1638/7 Prague 7, 170 00 Czech Republic info@bomma.cz