

Buoy bomma



Buoy boomma





Buoy bomma





Buoy boomma



Buoy Inspiration

Buoy Inspiration

A Private Harbour Shining Day and Night

Buoys mark safe zones and harbours with light – a sure guide for completing successful journeys. BOMMA Creative Director Václav Mlynář found inspiration in the symbolism and shape of buoys, designing lights that create a private harbour in your interior. “The Buoy Collection seeks a balance between sculpture and product design,” he explains. This exciting new addition combines classic geometric shapes, an unusual light source and monumental handblown crystal elements. Its clean minimalist shapes and monumental size allow the Buoy Collection to become a masterful focal point in any space. Buoys embody the best of glassmaking craftsmanship.

Design by Václav Mlynář





Buoy bomma



Buoy bomma

Václav Mlynář, designer of the collection and BOMMA‘s Creative Director

Buoy Production



Buoy boomma Each piece from Buoy collection is mouthblown

Buoy boomma

Each piece from Buoy collection is mouthblown

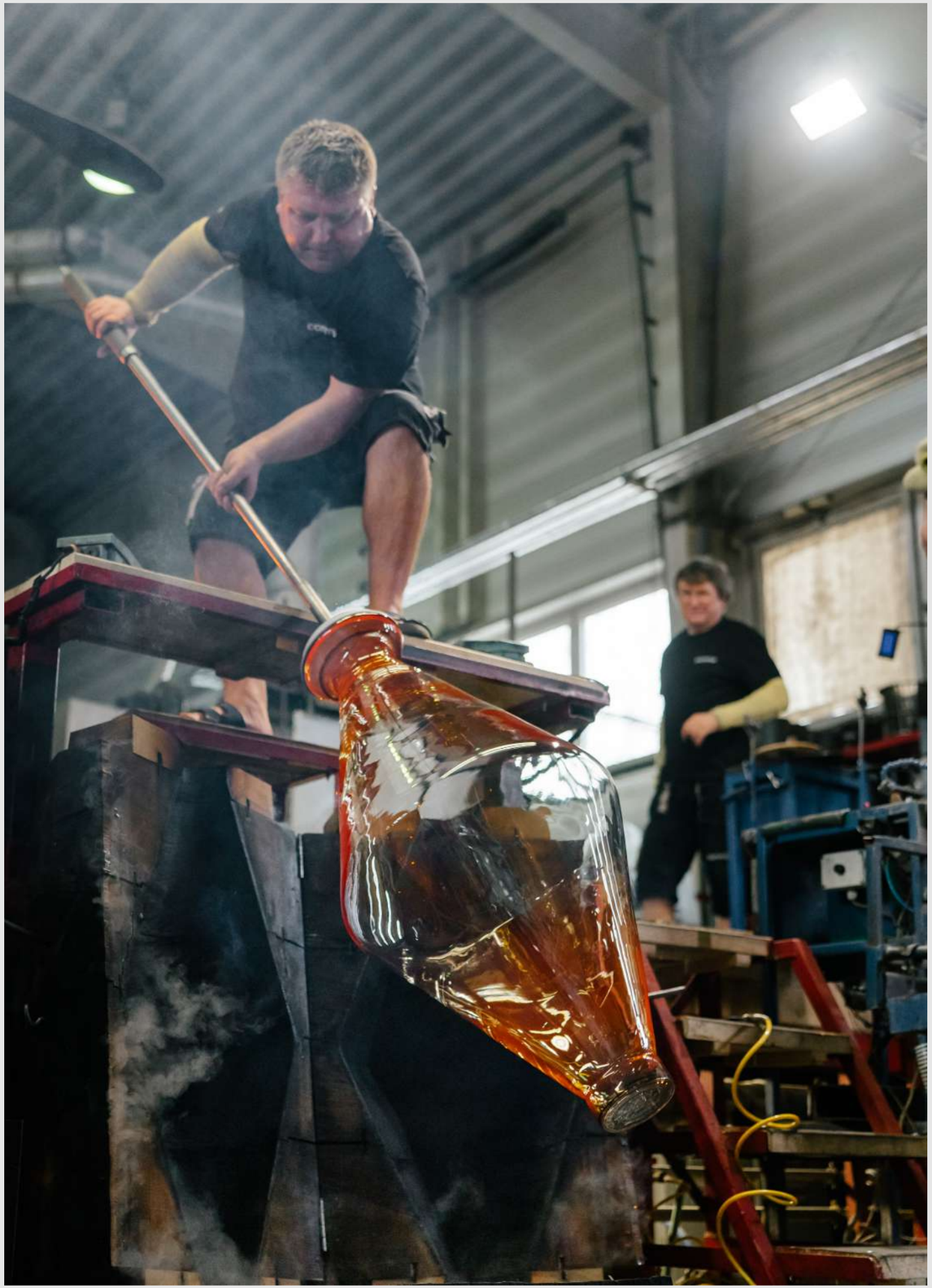

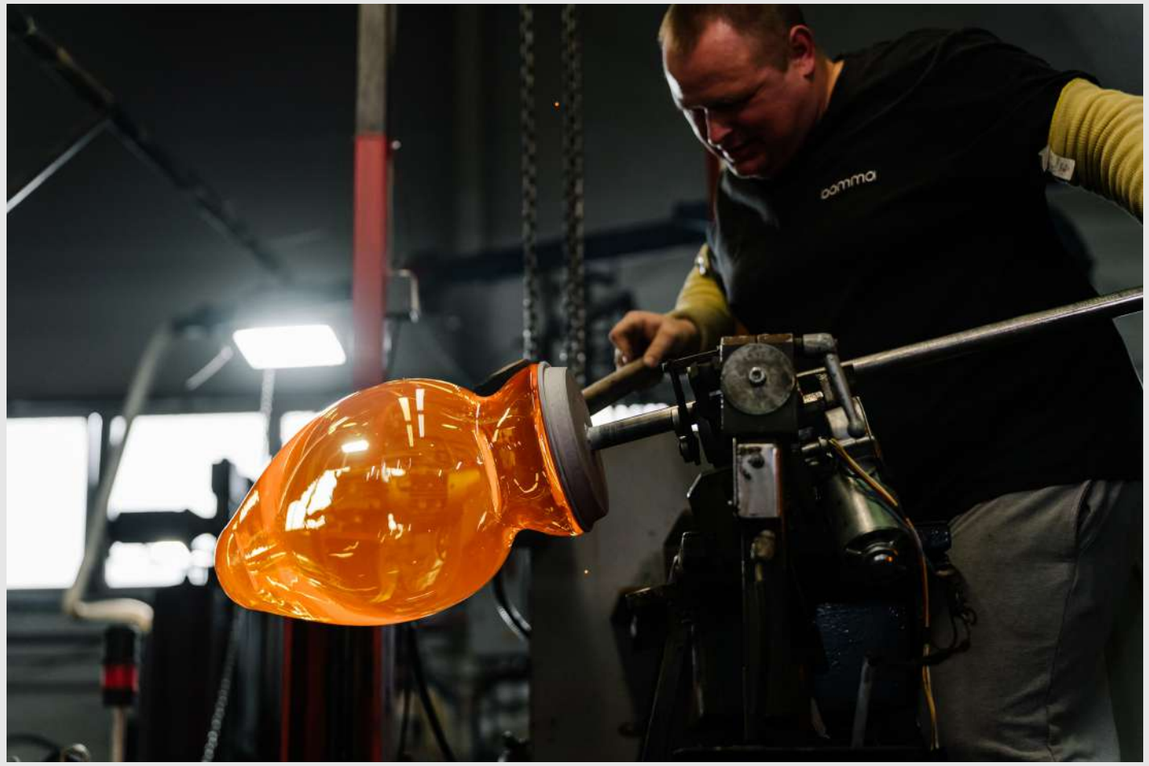

Buoy boomma Each piece from Buoy collection is mouthblown

Buoy Projects



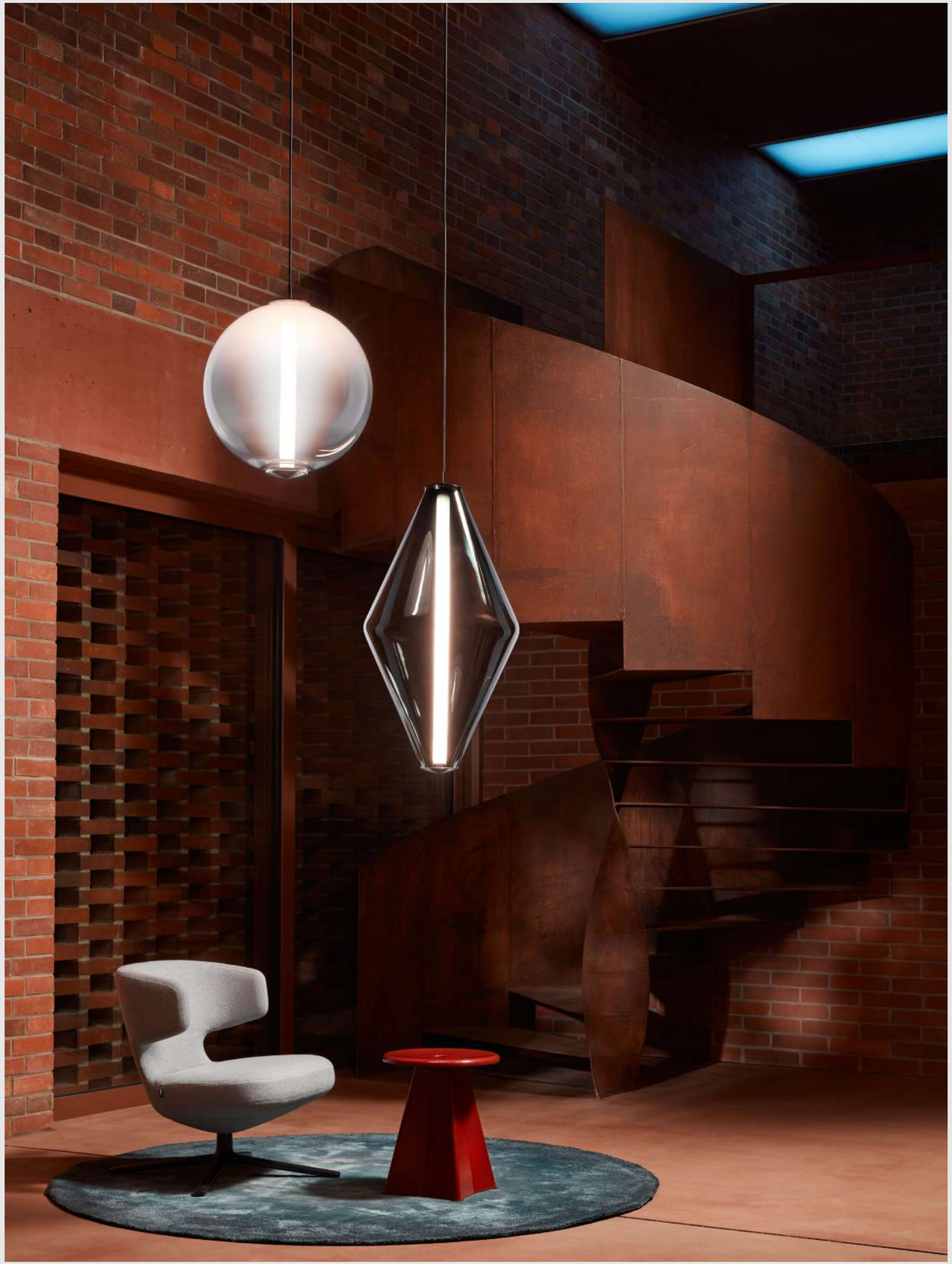

Buoy boomma Salone del Mobile 2025





Buoy bomma Euroluce 2025, Milan The elegant dining room, Florida, interior by Interiors by brown



Buoy boomma Cassina Aoyama Showroom, Japan, in Cooperation with Studio NOI





Buoy boomma

Buoy Options

Options

Pendant
Double Cone

Glass options clear / white / smoke
Fitting options silver / black



Clear / Black

White / Silver

Smoke / Silver

Options

Pendant
Sphere

Glass options clear / white / smoke
Fitting options silver / black



Clear / Black

White / Silver

Smoke / Silver

Buoy Technical Information

BUOY
pendant - double cone

Design by
Václav Mlynář

Handmade glass attributes

All Bomma products are hand-made from mouth-blown lead-free crystal. Therefore any small bubbles, non-melts and ir-regularities in the glass are both proof and a characteristic feature of this traditional craft.

The Buoy Collection is made by underlying colored glass technology. Thanks to the manual process of blowing underlay glass, each piece is an original. Individual products may vary slightly in intensity, hue or even color. This is an accompanying characteristic of the traditional underlay glass technology.

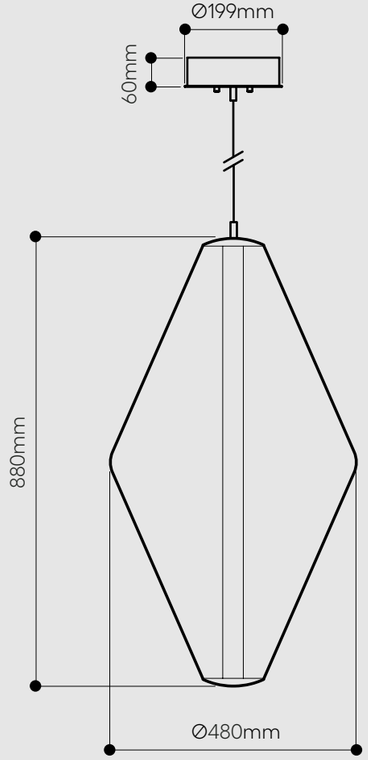

Buoy bomma

LIGHTING DESCRIPTION

Size	dia 480 mm, H 880 mm dia. 18,9 inch, H 34,6 inch
Cable	black textile braid cable 2,5 m 98,4 inch
Weight	+- 21 kg / 46,3 lb
Glass	mouth-blown lead-free crystal in clear, white, smoke
Mounting	black (=aluminium black elox), silver (=aluminium silver elox)
Canopy color	black (=matt powder coating)
Protection	IP 20
Nominal voltage	110-240V / A.C. 50–60 hz (EU) 110-120 V / A.C. 60 Hz (USA)
Class	I. EU / I. USA

LIGHT SOURCE

Type	LED module 21W, 2100lm, 700mA, 30V
Base	custom LED module
Temperature	2700 K
Color index	RA 90+
Dimming	Dimmable with TRIAC, ELV, 0-10V, PUSH, DALI, CASAMBI

PACKAGING

Material	Cardboard
Size	540 × 540 × 1030 mm 21,3 × 21,3 × 40,6 inch

Origin: traditionally produced in the Czech Republic
Intellectual property license holder: Bomma Czech Republic (EU)
Represented by BMRC group s.r.o.

CERTIFICATES

BUOY
pendant - sphere

Design by
Václav Mlynář

Handmade glass attributes

All Bomma products are hand-made from mouth-blown lead-free crystal. Therefore any small bubbles, non-melts and ir-regularities in the glass are both proof and a characteristic feature of this traditional craft.

The Buoy Collection is made by underlying colored glass technology. Thanks to the manual process of blowing underlay glass, each piece is an original. Individual products may vary slightly in intensity, hue or even color. This is an accompanying characteristic of the traditional underlay glass technology.

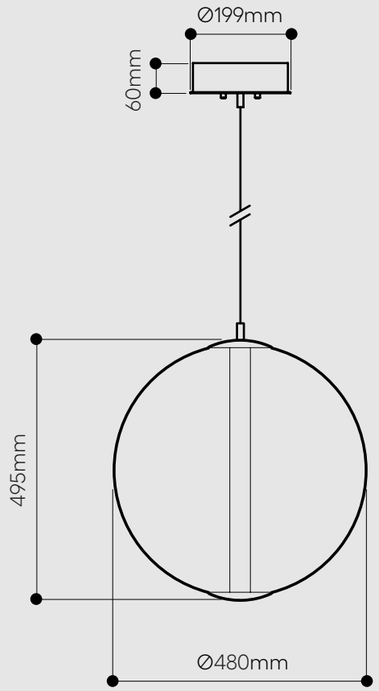

Buoy bomma

LIGHTING DESCRIPTION

Size	dia 480 mm, H 495 mm dia. 18,9 inch, H 19,5 inch
Cable	black textile braid cable 2,5 m 98,4 inch
Weight	+- 17 kg / 37,5 lb
Glass	mouth-blown lead-free crystal in clear, white, smoke
Mounting	black (=aluminium black elox), silver (=aluminium silver elox)
Canopy color	black (=matt powder coating)
Protection	IP 20
Nominal voltage	110-240V / A.C. 50–60 hz (EU) 110-120 V / A.C. 60 Hz (USA)
Class	I. EU / I. USA

LIGHT SOURCE

Type	LED module 14W, 1400lm,350mA, 40V
Base	custom LED module
Temperature	2700 K
Color index	RA 90+
Dimming	Dimmable with TRIAC, ELV, 0-10V, PUSH, DALI, CASAMBI

PACKAGING

Material	Cardboard
Size	780 × 660 × 660 mm 30,7 × 26 × 26 inch

Origin: traditionally produced in the Czech Republic
Intellectual property license holder: Bomma Czech Republic (EU)
Represented by BMRC group s.r.o.

CERTIFICATES

step beyond

BOMMA BMRC Group s.r.o. Pod dráhou 1638/7 Prague 7, 170 00 Czech Republic info@bomma.cz