

Blimp bomma

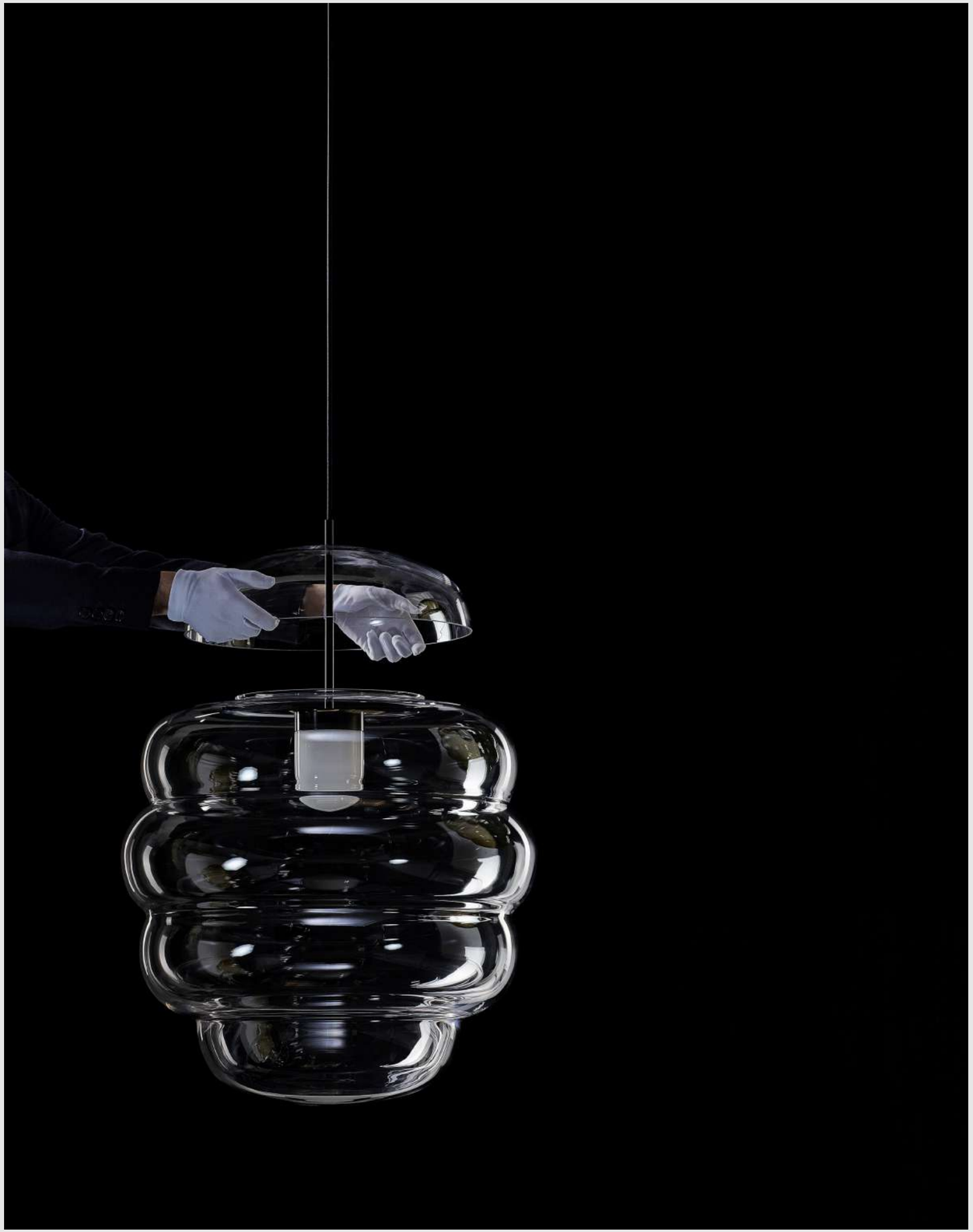



Blimp boomma





Blimp boomma

Blimp Inspiration

The unbearable lightness of glass

This stunning massive crystal cloudfloats in space with the lightness of zeppelin. Bomma master glassmakers created Blimp as the largest monumental and airy. This graceful giant is a testament to human ingenuity and craftsmanship.

Design by BIG-GAME Studio

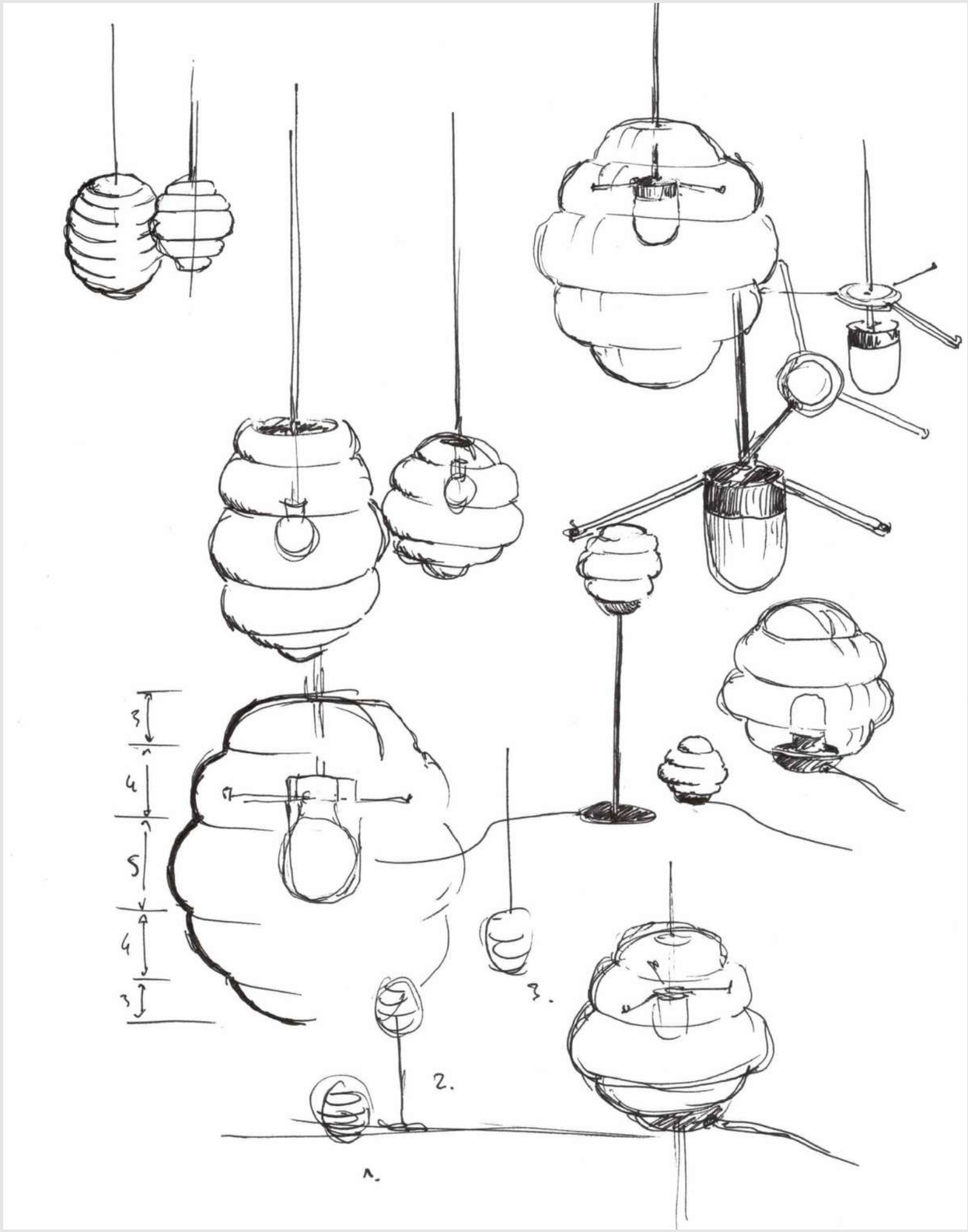

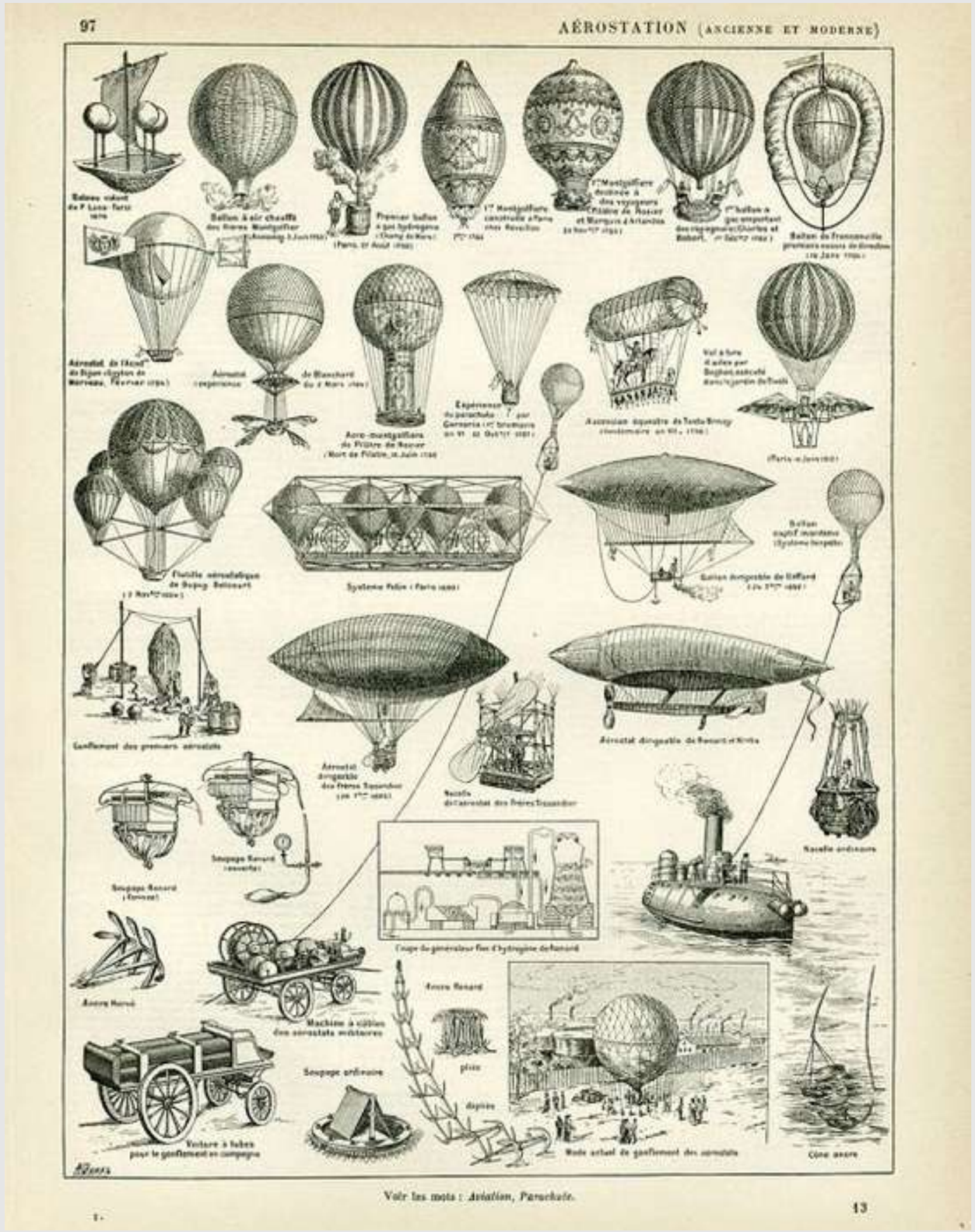

Blimp boomma

Blimp Production





Blimp bomma

Blimp Projects





Blimp boomma Visualization by AR visuals





Blimp bomma BOMMA Atelier, Prague, 2021 Euroluce 2023, Milan



Blimp bomma





Blimp bomma ZAN studio visualization Ton

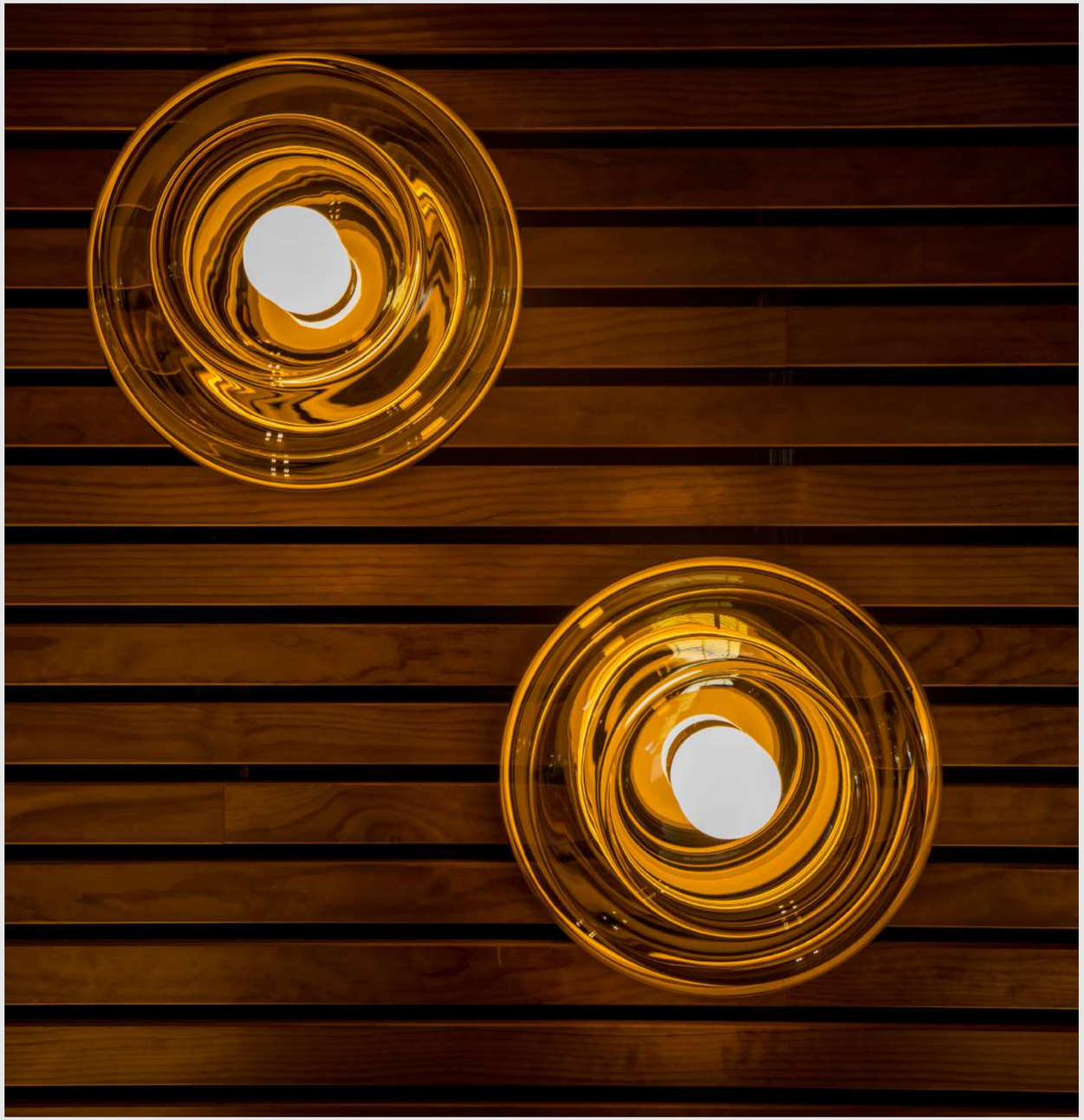



Blimp boomma concept of the space by Flatwhite architects

Blimp Options

Options

Pendant
Small

Glass options amber / clear

Fitting options black



Amber / Black



Clear / Black

Options

Pendant
Medium

Glass options amber / clear

Fitting options black



Amber / Black



Clear / Black

Options

Wall

Glass options amber / clear

Fitting options black



Amber / Black



Clear / Black

Blimp Technical Information

BLIMP pendant small

Design by
Big-Game

Handmade glass attributes

All Bomma products are hand-made from mouth-blown lead-free crystal. Therefore any small bubbles, non-melts and irregularities in the glass are both proof and a characteristic feature of this traditional craft.

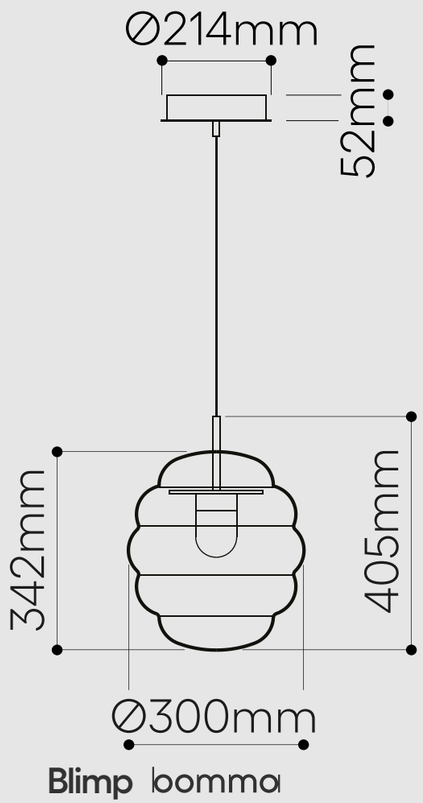

LIGHTING DESCRIPTION	
Size	dia 300 mm, H 405 mm dia 11,8 inch, H 15,9 inch
Cable	black textile braid cable 2,5 m / 98,4 inch
Weight	+- 8,1 kg / 17,8 lb
Glass	mouth-blown lead-free crystal in clear and amber
Mounting	black (aluminium black elox / steel with black powder coating)
Protection	IP 20
Nominal voltage	110-240V / A.C. 50-60 hz (EU) 110-120 V / A.C. 60 Hz (USA)
Class	I. EU / I. USA

LIGHT SOURCE	
Type	LED module 12W, 1200lm, 350mA, 34V
Base	custom LED module
Temperature	2700 K
Color index	RA 90+
Dimming	Dimmable with TRIAC, ELV, 0-10V, PUSH, DALI, CASSAMBI

PACKAGING	
Material	Cardboard
Size	420 × 420 × 490 mm 16,5 × 16,5 × 19,3 inch

Origin: traditionally produced in the Czech Republic
Intellectual property license holder: Bomma Czech Republic (EU)
Represented by BMRC group s.r.o.

CERTIFICATES

BLIMP pendant medium

Design by
Big-Game

Handmade glass attributes

All Bomma products are hand-made from mouth-blown lead-free crystal. Therefore any small bubbles, non-melts and irregularities in the glass are both proof and a characteristic feature of this traditional craft.

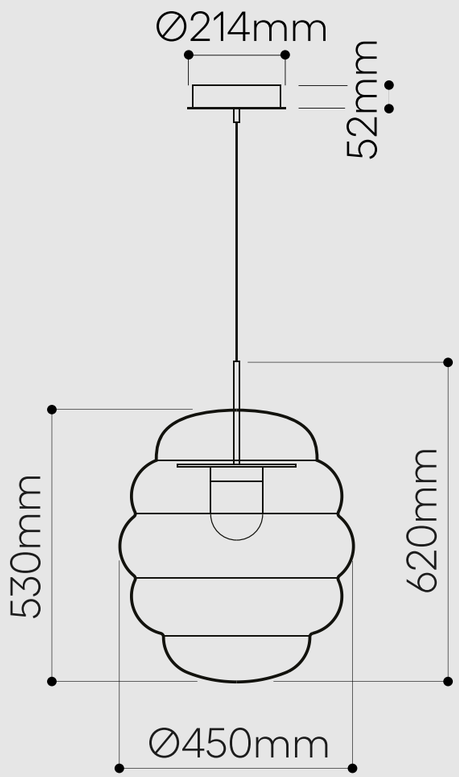

LIGHTING DESCRIPTION

Size	dia. 450 mm, H 620 mm dia. 17,7 inch, H 24,4 inch
Cable	black textile braid cable 2,5 m / 98,4 inch
Weight	+- 16,5 kg / 36,3 lb
Glass	mouth-blown lead-free crystal in clear and amber
Mounting	black (aluminium black elox / steel with black powder coating)
Protection	IP 20
Nominal voltage	110-240V / A.C. 50-60 hz (EU) 110-120 V / A.C. 60 Hz (USA)
Class	I. EU / I. USA

LIGHT SOURCE

Type	LED module 12W, 1200lm, 350mA, 34V
Base	custom LED module
Temperature	2700 K
Color index	RA 90+
Dimming	Dimmable with TRIAC, ELV, 0-10V, PUSH, DALI, CASSAMBI

PACKAGING

Material	Cardboard
Size	660 × 660 × 780 mm 26 × 26 × 30,7 inch

Origin: traditionally produced in the Czech Republic
Intellectual property license holder: Bomma Czech Republic (EU)
Represented by BMRC group s.r.o.

CERTIFICATES

BLIMP
wall & ceiling lighting

Design by
Big-Game

Handmade glass attributes

All Bomma products are hand-made from mouth-blown lead-free crystal. Therefore any small bubbles, non-melts and irregularities in the glass are both proof and a characteristic feature of this traditional craft.

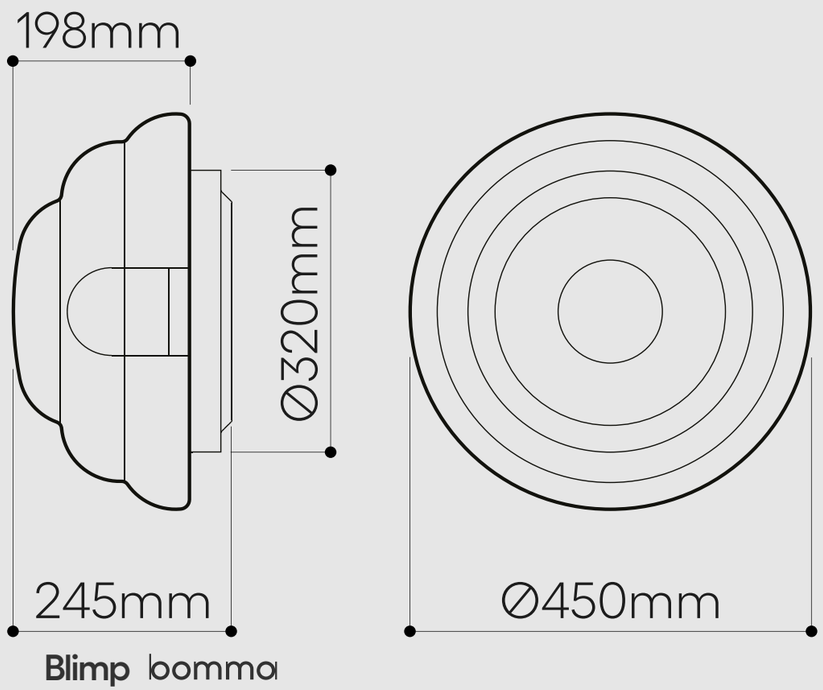

LIGHTING DESCRIPTION

Size	dia. 450 mm, H 245 mm dia. 17,7 inch, H 9,6 inch
Weight	+- 7,2 kg / 15,8 lb
Glass	mouth-blown lead-free crystal in clear and amber
Mounting	black (aluminium black elox / steel with black powder coating)
Protection	IP 20
Nominal voltage	220-240V / A.C. 50-60 hz (EU) 110-120 V / A.C. 60 Hz (USA)
Class	II. EU / I. USA

LIGHT SOURCE

Type	LED module 24,5W, 2450lm, 700mA
Base	custom LED module
Voltage	220-240V, AC (EU) / 110-120V, AC (USA)
Temperature	2700 K
Color index	RA 90+
Dimming	Dimmable with TRIAC, ELV, 0-10V, PUSH, DALI, CASSAMBI

PACKAGING

Material	Cardboard
Size	535 × 535 × 530 mm 21 × 21 × 20,8 inch

Origin: traditionally produced in the Czech Republic
Intellectual property license holder: Bomma Czech Republic (EU)
Represented by BMRC group s.r.o.

CERTIFICATES

step beyond

BOMMA BMRC Group s.r.o. Pod dráhou 1638/7 Prague 7, 170 00 Czech Republic info@bomma.cz